Second language teacher motivation

Dumančić, Dino

Doctoral thesis / Disertacija

2021

Degree Grantor / Ustanova koja je dodijelila akademski / stručni stupanj: **University of Zagreb, Faculty of Humanities and Social Sciences / Sveučilište u Zagrebu, Filozofski fakultet**

Permanent link / Trajna poveznica: https://urn.nsk.hr/urn:nbn:hr:131:959865

Rights / Prava: In copyright / Zaštićeno autorskim pravom.

Download date / Datum preuzimanja: **2024-03-29**

Filozofski fakultet
Sveučilišta u Zagrebu

Repository / Repozitorij:

ODRAZ - open repository of the University of Zagreb
Faculty of Humanities and Social Sciences

DIGITALNI AKADEMSKI ARHIVI I REPOZITORIJI

Sveučilište u Zagrebu

FACULTY OF HUMANITIES AND SOCIAL SCIENCES

Dino Dumančić

SECOND LANGUAGE TEACHER MOTIVATION – THE ROLE OF EMOTIONS AND EMOTION REGULATION

DOCTORAL THESIS

Zagreb, 2021

University of Zagreb

Faculty of Humanities and Social Sciences

Dino Dumančić

SECOND LANGUAGE TEACHER MOTIVATION - THE ROLE OF EMOTIONS AND EMOTION REGULATION

DOCTORAL THESIS

Supervisors:

Dr. Anna Martinović, Ph.D., Associate Professor

Dr. Irena Burić, Ph.D., Associate Professor

Zagreb, 2021

Sveučilište u Zagrebu

FILOZOFSKI FAKULTET

Dino Dumančić

MOTIVACIJA NASTAVNIKA INOG JEZIKA - ULOGA EMOCIJA I REGULACIJE EMOCIJA

DOKTORSKI RAD

Mentori:

izv.prof.dr.sc. Anna Martinović

izv.prof.dr.sc. Irena Burić

Zagreb, 2021.

ACKNOWLEDGEMENTS

I would like to express my sincerest gratitude to my supervisors, Dr. Anna Martinović and Dr. Irena Burić. Your expertise, insight, comments, patience, and support are what made this thesis happen. I learned a lot from both of you.

I would also like to extend my thanks to dear friends and colleagues from HUPE and various schools across Croatia for helping me spread word and gather data for my dissertation. A big thank you goes to the teachers that took time from their busy schedules to share their personal experiences with me via online surveys.

I thank my family for their love, understanding, and unconditional support during this challenging period. Thanks for always having my back. A special thanks goes to my aunt, Zlata, whose encouraging words, constant worry, and kind wishes pushed me forward in this academic endeavor.

To my fellow Ph.D. allies, Aida, Davorka, Hrvoje, Ivana, and Mirjam, I give a special thanks. The discussions we have shared, your constant encouragement, and helpful advice have been invaluable. I would also like to thank my dear friends for kicking me in the rear end when I needed it, and for always standing by me no matter what. To name a few, Majo B., Brane, Majo L.Š., Tina, Marina, Dado, Mila, Katice, you guys are like an extended family. I appreciate each and every one of you.

To my silent but loyal companion Kylie. You have followed me every step of the way. Rain or shine, we have seen and shared it all. Thank you for hanging in there with me.

Last but, by no means least, to my mom, Vesna. There is not much I can say except that I wish you were here. I miss you. I love you. And this thesis is dedicated to you. Hope you are proud.

SUMMARY

The goal of this study was to examine the relationship between motivational beliefs of L2 teachers and the emotions they experience while teaching and interacting with their learners. Another goal was to examine the mediating role of emotional labor in explaining the relationship between L2 teacher emotions and motivational beliefs. A total of 320 teachers of English partook in the study; moreover, 92.5% were female and 7.5% were male. Most worked in primary schools (55%) and less than half in secondary (40.31%). Data was obtained by means of online teacher diary and questionnaire. The diary findings showed that L2 teachers mostly experienced satisfaction, joy, and pride, and frustration, irritability and disappointment. These were mainly caused by learners, or the teachers themselves, and tied to activities, such as grammatical, speaking, and writing-based. The teachers regulated both types of emotions by using down-regulation, suppression, and reappraisal. Their ideal self-images rested on concepts such as expertise, success, motivation, emotional intelligence and competence. Majority of them was highly confident in their teaching abilities, regardless of the emotions experienced. Few exhibited low levels of self-efficacy. The quantitative segment revealed moderate levels of general teaching self-efficacy among the teachers. They felt more confident in their language abilities and less in facilitating language learning. L2 teachers had a somewhat clear understanding of who they strive to become as language teachers. They mostly experienced joy when dealing with students, but also fatigue in their line of work. To regulate them, majority showed their emotions openly, while few decided to suppress them. Pleasant emotions were positively tied to naturally felt emotions and deep acting, and negatively to surface acting. Conversely, unpleasant emotions were positively linked to surface acting, and negatively with the other two strategies. Three models were tested to investigate if emotions contribute in explaining self-efficacy and self-concept directly, as well as indirectly, by means of emotional labor. All models revealed both types of emotions as mediators between emotional labor strategies and the motivational variables. Pleasant emotions were positively related to deep acting and naturally felt emotions, and negatively to surface acting, which was positively related to unpleasant emotions. Pleasant emotions positively were positively related to all variables, except content knowledge, while unpleasant emotions were negatively associated with them.

Keywords: English language teachers; motivational beliefs; self-efficacy; self-concept; emotions; causes of emotions; classroom activities; emotion regulation strategies; emotional labor; emotional labor strategies

SAŽETAK

Opći cilj istraživanja je bio ispitati odnos između motivacijskih uvjerenja nastavnika inog jezika i emocija koje doživljavaju tijekom poučavanja i u odnosu s učenicima. Istraživanje je bilo mješovitog tipa, odnosno uključivalo je kvalitativne i kvantitativne metode istraživanja. Kvalitativni dio je operacionaliziran pomoću nastavničkog dnevnika, dok je kvantitativni dio putem upitnika koji je sadržavao više skala. Oba su instrumenta bila izrađena i korištena u digitalnoj domeni, odnosno online. Kvalitativni dio istraživanja je bio usmjeren na istraživanje emocija nastavnika i njihovih motivacijskih uvjerenja. Prvi dio, koji je ispitivao emocionalna iskustva nastavnika, se usmjerio na uzroke doživljenih emocija, nastavne aktivnosti u kojima su nastavnici sudjelovali i strategije regulacije kojima su nastavnici pribjegli kako bi povećali ili umanjili intenzitet emocija. Drugi dio dnevnika se posvetio motivacijskim vjerovanjima nastavnika, poput poimanja sebe u budućnosti te samoprocjene vlastite sposobnosti poučavanja, tj. samoučinkovitosti.

Kvantitativni dio je za cilj imao istražiti motivacijska uvjerenja nastavnika inog jezika koja su povezana sa samopoimanjem, općom samoučinkovitošću, kao i onom vezanom za poučavanje stranog jezika. Prva skala je ispitivala kako se hrvatski nastavnici engleskog jezika vide u budućnosti. Drugim riječima, imaju li jasnu viziju onoga što žele/ne žele postati te uzimaju li u obzir očekivanja okoline. Kad je riječ o percepciji vlastitih sposobnosti poučavanja, ponuđene su dvije skale – ona vezana za opću samoučinkovitost u poučavanju i druga za uvjerenja u poučavanju stranog jezika. Ukratko, područje opće samoučinkovitosti u poučavanju podrazumijeva domene poput izbora i uporabe primjerenih strategija poučavanja, upravljanja razredom te poticanje učenika na rad i podizanje njihove motivacije. Nadalje, kada govorimo o nastavničkim uvjerenjima vezanim za poučavanje stranog jezika, nastavnike se pitalo koliko su samouvjereni u svoje jezično umijeće, primjerice sposobnost razgovora s izvornim govornikom ili praćenja radnje filma koji je snimljen na jeziku koji poučavaju i koliko vjeruju da mogu potaknuti učenike na učenje stranog jezika koji poučavaju ili potaknuti njihovu motivaciju i postignuće u školi.

Nadalje, upitnikom se željelo istražiti emocionalna iskustva nastavnika engleskog jezika. S tim ciljem su rabljene dvije skale – skala koja je ispitivala ugodne i neugodne emocije nastavnika te skala koja je ispitivala koliko često nastavnici pribjegavaju strategijama emocionalnog napora. U slučaju skale s emocijama, važno je spomenuti da je predstavila sveukupno šest emocija (tri ugodne i tri neugodne). S druge strane, skala sa strategijama

emocionalnog napora je koristila razne čestice kako bi se ispitalo koliko često nastavnici potiskuju i glume emocije, ulažu napor u prizivanje prihvatljivih i za učionicu prigodnih emocija te iskazuju emocije koje zaista osjećaju. Naposljetku, cilj je bio ispitati medijacijsku ulogu emocionalnog napora u objašnjavanju odnosa između emocija nastavnika inog jezika i njihovih motivacijskih uvjerenja, poput samoučinkovitosti i samopoimanja.

Istraživanje je provedeno na uzorku od 320 hrvatskih nastavnika engleskog jezika. Većina nastavnika (55%) je bila zaposlena u osnovnim školama, dok je manje od pola nastavnika (40.31%) radilo u srednjim školama. Manji postotak pripao je nastavnicima koji su bili zaposleni u raznim privatnim školama, školama stranih jezika te fakultetima. Veći broj nastavnika činile su žene (92.5%), a manji je broj pripadao muškarcima (7.5%). Srednja dobna vrijednost sudionika iznosila je 36.78 godina. Uzorak je prikupljen iz raznih dijelova Hrvatske, točnije iz sedam županija: Osječko-baranjske, Vukovarsko-srijemske, Brodsko-posavske, Bjelovarsko-bilogorske, Zagrebačke, Karlovačke i Zadarske. Također je važno istaknuti da su različiti uzorci nastavnika sudjelovali dvjema etapama ovog istraživanja. Dok je svih 320 nastavnika sudjelovalo u kvantitativnom dijelu, odnosno ispunjavanju online upitnika, samo je 20 ispunjavalo nastavnički dnevnik koji pripada kvalitativnom dijelu.

Kako je ranije spomenuto, podatci za istraživanje prikupljeni su pomoću dva odvojena instrumenta: online nastavničkog dnevnika i upitnika. Instrumenti su kreirani pomoću online servisa i platformi namijenjenih provedbi istraživanja, poput SurveyMonkey i Google Forms. Po završetku izrade, oba su odaslana diljem zemlje putem istih online servisa. Prikupljeni podatci podvrgnuti su različitim tipovima analiza. Kad je riječ o nastavničkom dnevniku, na tiskanim unosima je provedena analiza sadržaja. Cilj je bio izdvojiti ključne podatke vezane za već određene kategorije i shodno ih grupirati. Ispitana je i učestalost određenih pojavnosti, primjerice ugodnih i neugodnih emocija, aktivnosti u kojima su učenici i nastavnici sudjelovali, strategija regulacije i drugih. Također se istražila međusobna povezanost između različitih varijabli, primjerice koje su emocije nastavnici najčešće doživljavali za vrijeme određenih aktivnosti. Uz emocije, analiza je obuhvatila i motivacijska uvjerenja nastavnika. Željelo se saznati kako nastavnici poimaju sebe u budućnosti i koliko su uvjereni u vlastite sposobnosti poučavanja. Ispitala se i povezanost između ta dva konstrukta i doživljenih emocija. S druge strane, više različitih analiza je provedeno na podatcima dobivenim online upitnikom. Prvi korak je uključivao deskriptivnu analizu kako bi se moglo utvrditi: broj sudionika, pouzdanost skala i srednja vrijednost po svakoj podskali.

Sljedeći korak je uključivao korelacijsku analizu čiji je cilj bio ispitati međuodnos različitih varijabli. Posljednji korak je podrazumijevao strukturalno modeliranje kako bi se provela analiza strukturiranih odnosa. Rezultati kvalitativnog dijela istraživanja pružili su zanimljiv uvid u emocionalna iskustva hrvatskih nastavnika, kao i njihova motivacijska uvjerenja. Kad je riječ o emocijama, nastavnici su doživljavali ugodne i neugodne emocija. Među ugodnima, najistaknutije su bile zadovoljstvo, radost i ponos, dok su frustriranost, razdražljivost i razočaranost bili najčešće doživljene neugodne emocije. Kad je riječ o uzrocima tih emocija, vidljivo je da je veći dio vezan isključivo za učenike. Manji postotak je vezan za nastavnike ili nastavne materijale.

Kako bismo ukratko prikazali uzroke, mnogi hrvatski nastavnici su rekli kako su njihove ugodne i neugodne emocije potaknuli učenici, primjerice njihova motiviranost na nastavi, iskazivanje znanja, samostalnosti i kreativnosti, kao i neprimjereno ponašanje, nezainteresiranost, nespremnost, i loše ocjene na ispitu. Neki su istaknuli kako su sami uzrokovali određene emocije, primjerice kašnjenjem, nepripremljenošću za sat i sličnim razlozima su doveli do loše strukturiranog nastavnog sata koji je za posljedicu imao osjećaj krivnje, tuge ili razočaranosti. Nadalje, nastavnici su doživjeli emocija uslijed raznih nastavnih aktivnosti. Rezultati su prikazali koje su nastavne aktivnosti bile vezane za ugodne emocije, a koje za neugodne. Počevši s ugodnim emocijama, hrvatski nastavnici su često doživljavali zadovoljstvo, radost, ponos kada su uočili da njihovi učenici ispravno koriste glagolska vremena (gramatičke aktivnosti), samostalno i samouvjereno drže izlaganje na odabranu temu (govorne aktivnosti), skupno surađuju na različitim ulomcima iz teksta (aktivnosti čitanja s razumijevanjem) te uspješno rabe novo usvojene riječi u prepričavanju ili objašnjavanju nečega (aktivnosti usmjerene na usvajanje leksika). S druge strane, gramatičke i govorne aktivnosti su također bile istaknute u kategoriji s neugodnim emocijama, no iz posve drugih razloga. Nastavnici su nerijetko doživljavali razočaranost, frustraciju ili tugu zbog učenika koji nisu htjeli surađivati na satu, odbijali rješavati zadatke iz gramatike ili su dolazili na nastavu nepripremljeni (primjerice, za usmeno izlaganje ili ispitivanje).

Sljedeći aspekt koji se ispitao su bile strategije regulacije emocija. Prema rezultatima, hrvatski nastavnici engleskog jezika su rabili strategije za reguliranje ugodnih i neugodnih emocija u učionici i izvan nje. Kada govorimo o ugodnim emocijama, nastavnici su najčešće umanjivali intenzitet emocija poput zadovoljstva, radosti ili entuzijazma kako bi ostali pribrani i profesionalni pred učenicima. Također su otvoreno i iskreno iskazivali ono što osjećaju u datom trenutku. Nešto manji broj nastavnika je priznao da potiskuje ugodne

emocije. Potiskivanje ili supresija je usko vezan konstrukt s ranije spomenutim umanjivanjem intenziteta (engl. down-regulation). Nadalje, rezultati su pokazali kako je veći dio nastavnika regulirao upravo neugodne emocije. Kada ih se pitalo kako se nose s njima, brojni nastavnici su rekli da koriste ponovnu procjenu (također znanu kao reprocjenu). Ta strategija označava pokušaj sagledavanja situacije iz druge perspektive i hrvatski nastavnici su ju koristili kada su doživjeli razočaranje, tugu i razdražljivost. Druga strategija po redu je bila duboko disanje. Nastavnici su ju rabili u trenutku kada je emocionalna epizoda već krenula i kada su se morali nositi s posljedicama neugodnih emocija, poput frustriranosti, ljutnje ili tjeskobe. Nešto manji broj nastavnika engleskog jezika je priznalo da potiskuje neugodne emocije ili pokušava pronaći nekoga za razgovor. To je bio slučaj kada su doživjeli emocije poput frustriranosti, razočaranja i tuge.

Slijedi kratki pregled motivacijskih uvjerenja hrvatskih mastavnika engleskog jezika; ispitivalo se njihovo samopoimanje (vizija) sebe u budućnosti te uvjerenja o samoučinkovitosti u poučavanju. Kada ih se zamolilo da otkriju sliku sebe u budućnosti, odgovori nastavnika su otkrili različite primjere koji su bili vezani za pojmove poput stručnosti, uspjeha, kompetencije, motivacije i emocionalne inteligencije.

Točnije, kvalitativna analiza je iznjedrila osam specifičnih vizija sebe u budućnosti: 1) nastavnik koji se razvija; 2) uspješan nastavnik; 3) kompetentni nastavnik; 4) motivirani i motivirajući nastavnik; 5) pozitivni i optimistični nastavnik; 6) emocionalno inteligentni nastavnik; 7) samouvjereni nastavnik; i 8) pesimistični nastavnik. Što se tiče samoučinkovitosti u poučavanju, samoprocjenu nastavnika se povezalo s ugodnim i neugodnim emocijama. U kategoriji ugodnih emocija, većina nastavnika je iskazala visoku razinu samopuzdanja u svoje sposobnosti poučavanja. Ta procjena je uz emocije, poput zadovoljstva, ponosa i radosti, povezana s nastavnim aktivnostima koje su joj prethodile. Među njima se ističu gramatičke aktivnosti, usmena izlaganja i usmeno ispitivanje. Druga po redu skupina nastavnika je iskazala umjerenu razinu samoučinkovitosti u poučavanju i povezala ju s emocijama poput radosti, ponosa i uzbuđenja. Kada ih se pitalo u kojim su aktivnostima bili uključeni, spomenuli su učeničke radionice i projekte, rasprave te ponavljanje za ispit. Najmanja skupina pripala je nastavnicima s niskom razinom samoučinkovitosti. Svoju procjenu su povezali s različitim aktivnostima, poput opservacije u razredu i ponavljanja gramatike.

Rezultati vezani za drugu kategoriju, koja uključuje nastavničke samoprocjene vezane za neugodne emocije, su pokazali sličnu stvar kao u prethodnom dijelu. Veći dio nastavnika je iskazao visoku razinu samoučinkovitosti usprkos doživljavanju neugodnih emocija poput razdražljivosti, ljutnje i straha. Također je zanimljivo da su spomenuli slične nastavne aktivnosti, kao što su gramatičke aktivnosti i usmeno ispitivanje. Nadalje, nešto manja skupina nastavnika je iskazala umjerenu razinu samoučinkovitosti u poučavanju engleskog jezika. Prema njihovim riječima, promatranje izlaganja studenata, rad na gramatičkim aktivnostima, kao i provođenje testova je u njima prouzrokovalo razne neugodne emocije, poput razočaranja, razdražljivosti i dosade. Naposljetku, maleni postotak nastavnika pripao je skupini s niskom razinom samoučinkovitosti. Kada ih se pitalo u koje su aktivnosti bili uključeni, naveli su gramatičke te unošenje ocjena u e-imenik, a doživjeli su osjećaj nemoći, sramote i frustriranosti.

Kada je riječ o rezultatima deskriptivne analize u okviru kvantitativnog dijela rada, pokazalo se da su hrvatski nastavnici umjereno samouvjereni u svoje sposobnosti poučavanja. Kada promatramo pojedinačne podskale, možemo uočiti kako je njihova samoučinkovitost najviše izražena u području odabira i uporabe odgovarajućih strategija poučavanja, a najmanje u dijelu koji zahtjeva poticanje učenika na rad i motiviranje na učenje. Njihova procjena se pokazala boljom kada ih se pitalo za samoučinkovitost u poučavanju stranog jezika, koja podrazumijeva njihovu jezičnu sposobnost i mogućnost poticanja učenja jezika kod učenika. Nastavnici su bili poprilično samouvjereni u svoju sposobnost jezične uporabe , dok su bili znatno manje samouvjereni u svoje sposobnosti motiviranja i podizanja interesa učenika za učenje engleskog jezika. Rezultati su također ukazali na činjenicu da hrvatski nastavnici imaju donekle jasnu sliku sebe u budućnosti, odnosno onoga što žele postati kao nastavnici. Kada govorimo o doživljenim emocijama, radost je bila najistaknutija ugodna emocija, dok je umor bio najistaknutija neugodna emocija. S druge strane, nastavnici su najmanje doživljavali ljubav u odnosu s učenicima te ljutnju kao neugodnu emociju. Po pitanju uporabe strategija emocionalnog napora, nastavnici su prvenstveno istaknuli kako iskazuju prirodne emocije kako im dođu (eng. naturally felt emotions).

Nadalje, otkrili su da također pribjegavaju strategijama izazivanja odgovarajućih emocija u sebi (eng. deep acting), kao i potiskivanja te iskazivanja osjećaja koje nemaju (eng. surface acting). Posljednja strategija je bila najmanje zastupljena među hrvatskim nastavnicima engleskog jezika, što ukazuje na činjenicu da ju rijetko kad koriste. Prema rezultatima korelacijske analize, ugodne su emocije imale pozitivnu poveznicu sa strategijom

prikazivanja prirodnih osjećaja te strategijom izazivanja prigodnih osjećaja u sebi, a negativnu sa strategijom potiskivanja i glumljenja emocija. S druge strane, neugodne emocije su bile pozitivno povezane sa strategijom potiskivanja i glumljenja emocija, a negativno sa strategijom iskazivanja iskrenih emocija. Također, ugodne emocije su bile pretežito pozitivno povezane s većinom motivacijskih vjerovanja (izuzev nekih, poput znanja iz stranog jezika).

U radu su se testirala tri modela kako bi se ispitalo doprinose li emocije, izravno ili neizravno, putem emocionalnog napora, objašnjavanju samoučinkovitost i samopoimanja. Sva tri modela su ukazala na činjenicu da ugodne i neugodne emocije služe kao posrednici između strategija emocionalnog napora i sljedećih konstrukata: samoučinkovitosti u poučavanja, samoučinkovitosti u poučavanju stranog jezika te samopoimanja. Ugodne emocije su, u svim modelima, bile pozitivno povezane sa strategijama iskazivanja iskrenih emocija i izazivanja odgovarajućih emocija u sebi, a negativno sa strategijom potiskivanja i glume emocija. Suprotno tome, strategija potiskivanja i glume emocija je bila pozitivno povezana s neugodnim emocijama, a negativno povezana sa strategijama iskazivanja iskrenih emocija i izazivanja odgovarajućih emocija u sebi. Prvim modelom se prikazala pozitivna povezanost između ugodnih emocija i samoučinkovitosti u počuavanju te negativna povezanost neugodnih emocija i istog konstrukta. Ista situacija je uočena u drugom modelu koji je za konstrukt imao samoučinkovitost u poučavanju stranih jezika. Naposljetku, kada promatramo treći model, možemo uočiti pozitivan odnos između ugodnih emocija i samopoimanja nastavnika, kao i negativnu povezanost neugodnih emocija i istog konstrukta.

Ključne riječi: nastavnici engleskog jezika; motivacijska uvjerenja; samoučinkovitost; samopoimanje; emocije; uzroci emocija, nastavne aktivnosti; strategije regulacije emocija; emocionalni napor; strategije emocionalnog napora

CONTENTS

CHAPTER 1: INTRODUCTION…….…….1

1. INTRODUCTION……..1
   1.1.Motivation and motivational beliefs……...1
      1.1.1. Self-efficacy…….....3
      1.1.2. Self-concept…….....4
   1.2.Emotions and emotion regulation……6
      1.2.1. Emotional labor……8
   1.3. L2 Teachers' motivational beliefs, emotions, and emotional labor……...9
   1.4. Theoretical framework of the thesis…….……11
   1.5. Research aims……....12
   1.6. Significance of the Study…….…..12
   1.7. Structural Overview of the Thesis…….…12

CHAPTER 2: THEORETICAL OVERVIEW……..14

2. THEORETICAL OVERVIEW…….....14
   2.1. Motivation……14
      2.1.1. Historical evolution of L2 motivation theories……15
      2.1.2. Teacher motivation……26
      2.1.3. Self-efficacy…….…..29
      2.1.4. Teacher self-efficacy……..32
      2.1.5. Future self-guides……...43
   2.2. Emotions……53
      2.2.1. Defining emotions……..53
      2.2.2. Causes of emotions…….....57
      2.2.3. Effects of emotions……60
      2.2.4. Emotions in the classroom…….....62
   2.3. Emotion regulation……70
      2.3.1. Defining self/affect-regulation……...70
      2.3.2. Models of emotion regulation……73
      2.3.3. Emotion regulation in the classroom……..76
   2.4. Emotional Labor……82
   2.5. Research on teachers' motivational beliefs, emotions, and emotion regulation...89

CHAPTER 3: AIM AND METHOD……..93

3. Aim and method……..… .93
   3.1. Aim…….93
      3.1.1. Research questions……..93
      3.1.2. Hypotheses……...…93
   3.2. Method……94
      3.2.1. Sample…….....94
      3.2.2. Instruments……..95
      3.2.3. Procedures……97
      3.2.4. Data analysis……98

CHAPTER 4: RESULTS……..100

4. Results……100
4.1. Qualitative analysis – Teacher diary……100
4.1.1. Teacher emotions and their causes…….. 100
4.1.2. Classroom activities……...109
4.1.3. Emotion regulation strategies……114
4.1.4. Ideal teacher self-images……120
4.1.5. Teaching self-efficacy beliefs……133
4.2. Quantitative analysis – Questionnaire……..139
4.2.1. Descriptive analyses……...139
4.2.2. Correlation analysis……142
4.2.3. Structural Equation Modeling (SEM)……147

CHAPTER 5: DISCUSSION……..155

5. Discussion……..155
5.1. General findings……..155
5.1.1. Results of the qualitative analysis……....155
5.1.2. Results of the quantitative analyses……168
5.2. Validation of Hypothesis 2a……170
5.3. Validation of Hypothesis 2b……173
5.4. Validation of 2c Hypothesis……177
5.5. Validation of 2d Hypothesis……179
5.5.1. The Mediating role of emotional labor strategies in the relationship…179 between emotions and teacher self-efficacy, foreign language teacher self-efficacy, and teacher self-concept

CHAPTER 6: CONCLUSION……182

6. Conclusion…….....182
6.1. Significance of the findings……....193
6.2. Limitations of the study……..193
6.3. Recommendations for further research……..….194
6.4. Implications for teaching……194

REFERENCES……..…..196

APPENDICES……....223

CURRICULUM VITAE…….....231

CHAPTER 1: INTRODUCTION

1. Introduction

When discussing second language (L2) teacher beliefs and emotional experiences one must consider a multitude of related components to obtain a wider picture. From a broader perspective, the process of learning, as well as teaching, entails diverse factors such as learners, teachers, learning/teaching context, their individual characteristics, and others. The scope of second language acquisition (SLA) research has focused on the process of learning any language that comes after one's first or mother tongue. Such a process may encompass formal learning, as in the classroom, or informal learning, which may take place in naturalistic contexts (Saville-Troike, 2012). Moreover, it is well-established that the SLA process, as well as much of related research, targets the learners, thus taking into account what it is they know, how they come by certain knowledge, and what makes some learners more successful than others. Less research, however, has placed teachers in the limelight and set out to uncover how they operate, what their goals are, what drives their behavior, and how they balance their needs, feelings, and beliefs with those of their learners. Considering the disparity in research, as well as the educational context, motivational and emotional aspects of teaching a foreign language will be at the core of this work.

1.1.Motivation and Motivational Beliefs

A brief glimpse into the nature of the word motivation will point the reader toward the Latin word *movere* which translates as 'to move'. This movement pertains to the process in which a person acts and maintains effort so they could achieve their goals (Melendy, 2008). Schunk and colleagues (2008) referred to the same concept from an educational psychological perspective; namely, they described one's commencement and persistence with a goal-directed activity. Motives are essential here as they are considered forces that fuel our behavior. To exemplify, Reeve (2009) mentions internal motives (e.g. emotions or cognitions) and external motives (stemming from cultural or social sources).

Numerous scholars, for instance, Tremblay and Gardner (1995), Dörnyei (2005, 2009), Ushioda (2011), have contributed to our understanding of motivation in the second language learning context. Dörnyei (1998) illustrated second language motivation through the prism of different concepts, such as the learner's identity, emotions, as well as the societal and cultural relevance of that language. As is visible from the examples above, emotions can act as powerful motivators. The relationship between learner motivation and emotions has been noted by authors such as Dörneyi and Ushioda (2009), MacIntyre, MacKinnon and Clément (2009), Dewaele (2011), and others. In regard to teacher motivation, it has received much attention in recent years. Schunk et al. (2008) attest to this by providing an overview of different studies carried out on the topic. Teacher motivation goes beyond the unidimensional concepts such as enthusiasm. Moreover, teacher-focused research, akin to that of learners, can investigate how motivated teachers are, as well as what kinds of reasons underlie their motivation (Hall & Goetz, 2013).

The increase in the number of empirical studies involving teachers has led to the discovery of a host of intriguing motivation-related factors, such as contextual, social, developmental factors, as well as others (Fives & Alexander, 2004; Alexander, 2008). Another valuable addition to the research of second language teacher motivation came from Dörnyei and Ushioda (2011). Namely, they underscored four key domains in L2 teacher motivation, such as intrinsic component, contextual factors, temporal axis, and fragility, which is tied to unfavorable influences. For instance, the intrinsic aspect denotes a teacher's inner desire to teach or to start a career in teaching. This concept may be connected to the teacher vision and one's ideal image, which act as powerful motivators that help shape teacher's future behavior (Dörneyi & Kubanyiova, 2014). The contextual factors may include aspects ranging from the teacher's image in society to school size, climate, co-worker relationships and others. How a teacher perceives themselves reflects not only their inner desires, but also their motivational trajectory. Furthermore, we can observe the temporal axis component as a path down which the teacher walks. Moreover, on that path of teaching the teacher will be motivated by different types of motivators, such as intrinsic and extrinsic rewards. Lastly, fragility represents the challenges teachers tend to face in their profession. Those might come in the form of dissatisfaction, burnout, attrition, lacking self-efficacy, and others. That is why it is important to consider teachers' needs, as well as their well-being.

Teachers' motivational beliefs represent another key aspect which affects how teachers construe new information and new experiences (Phillips & Borg, 2007). These beliefs are considered a notion which encompasses teachers' perceptions, thoughts, behaviors, as well as their attitudes (Richardson, 1996). In addition, teachers' beliefs are related to their learners, profession, colleagues, the subjects they teach, and their obligations (Pajares, 1992). Freeman (2002) claims that teachers' actions in the classroom reflect their mental lives; in addition, a number of mental concepts have been taken into consideration when examining how teachers teach, such as images, knowledge, beliefs, and emotions. The scope of teachers' motivational beliefs also envelops constructs such as self-efficacy and self-concept. To elaborate, teachers can express their belief regarding their ability to execute a specific task in the classroom. They can also describe how they perceive themselves as individuals in charge of teaching and relate those perceptions to their behavior, goals, and emotions. The following chapters will discuss these motivational constructs in more detail.

1.1.1. Self-Efficacy

The belief we have in our abilities will directly translate onto our motivation, and our actions. This tenet encompasses the notion of self-efficacy. What is also important is the fact that one must also believe that their actions will result in a positive outcome. Bandura (1997) claims that our perception of our abilities will be dependent upon various factors, for instance, our previous experiences, emotional states, and the models we have been observing. Self-efficacy is interesting because it does not indicate our actual abilities, but those that we believe we have, i.e. sense of efficacy (Tschannen-Moran & Woolfolk Hoy, 1998). The same holds true in the case of teaching. In other words, teacher efficacy, as one of the key motivational concepts of this study, describes a teacher's belief in their abilities to achieve a positive outcome with their learners, to organize and execute the tasks envisioned. To clarify, the focus is on their self-perceived belief or confidence to help their students learn better, master the teaching content, become more active, follow the classroom rules, and so on (Pajares & Urdan, 2006). Following in a similar vein, Dörnyei and Ushioda (2011) discussed teacher efficacy by breaking it into two components: *teaching* and *personal* efficacy. To briefly elucidate, teaching efficacy takes into consideration teachers' perception of their abilities to engender student learning. Personal efficacy, on the other hand, puts the teacher under a microscope and involves a teacher's evaluation of their capacity to teach.

Tschannen-Moran and colleagues (1998) made a valuable contribution to the development of teacher efficacy by proposing a model that was based on Bandura's work. While retaining his original concept, the authors introduced two other concepts; namely, the teacher's assessment of the teaching task and a teacher's evaluation of their abilities. In regards to foreign language teaching self-efficacy research, there has been more attention from different scholars in the past several years than ever before. Thanks to authors such as Shim (2001), Chacon (2005), Lee (2009), and others, we now have a better understanding of what foreign language teaching self-efficacy entails and how it relates to other teacher-related concepts, such as proficiency. Among many notable researchers, the author would like to mention the contribution of Swanson and Huff's work (2010) who introduced a new scale for measuring foreign language teacher self-efficacy beliefs. Specifically, the authors identified two aspects of teacher self-efficacy: 1) content knowledge; and 2) teacher as facilitator. To clarify, content knowledge targets the teacher's confidence in their language faculties, whereas teacher as facilitator denotes their belief in their capacity to promote student learning, success, motivation, and so on.

1.1.2. Self-Concept

Alongside self-efficacy beliefs, teacher self-concept is another notable motivational aspect of this study. It all began with the interest psychologists had in the notion of 'self', its meaning, and its association to human behavior (Higgins, 1996). According to the author, the concepts of 'possible selves' and 'future self-guides' represent the most notable domains in the study of 'self'. Dörnyei and Ushioda (2009) have noted that the work psychology experts carried out in the area of personality psychology (mapping stable domains of our personalities) helped facilitate further research focusing on the relationship between our personality traits and our behavior. Notable scholars, such as Markus and Nurius (1986) attempted to uncover how our sense of self determines our behavior through the scope of our goals and expectations. Their theory is based on the vision of self that has not yet been realized ('possible selves'). In other words, people make visions of themselves based on their dreams, desires, and fears. Key elements of their theory include the following: 1) selves that we would like to become (ideal self); 2) 'selves' that we could become (possible self); and 3) 'selves' that we are afraid of becoming (feared self). It should be stated that one's envisioned self is fully enmeshed in one's reality. To clarify, the vision that one has of oneself is quite palpable (being able to taste, smell, see it). Markus and Ruvolo (1989) attest to this by

highlighting the relationship between one's future image of themselves, their present experiences, and their goal-directed behavior. An intriguing change in the area of L2 motivation research was marked by Dörnyei's (2005, 2009) proposal of the L2 Motivational Self System (L2MSS) which was based on possible selves theory. The L2MSS was built upon by Kubanyiova (2012), who devised her own model intended for teacher motivation.

To briefly illustrate, Dörnyei's (2005, 2009) framework drew from earlier work in psychology and L2 motivation research and included three key components of motivation: 1) Ideal L2 Self; 2) Ought-to L2 Self; and 3) L2 Learning Experience. The Ideal L2 Self indicates the image of what the learner would like to become (a proficient L2 speaker), the Ought-to Self focuses on the image of who the learner becomes in relation to other people's expectations and criticism, and the L2 Learning Experience entails situation-specific factors that relate to the learners' motivation to carry out certain tasks in the classroom. When it comes to Kubanyiova (2012), her work was influenced by the work of her mentor, Zoltan Dörnyei. The Language Teacher Conceptual Change (LTCC) model is of great importance because it not only focuses on teacher motivation, but also because it re-introduces the concept of feared self that was not present in the L2MSS model. The notion of feared self was mentioned earlier by Markus and Nurius. The LTCC model set forth three elements: 1) the Ideal Language Teacher Self; 2) the Ought-to Language Teacher Self; and 3) the Feared Language Teacher Self. The first element describes the image that rests on teacher's aspirations and identity-related goals. The teacher will demonstrate motivation to minimize the discrepancy between the actual and the ideal teacher self. The second element, labeled the Ought-to Language Teacher Self, takes into account the teacher's obligations related to their work. The teacher is motivated to reduce the gap between the actual and ought-to self by external sources, such as avoiding negative repercussions. The third component depicts the image of a teacher one would not like to become; moreover, the image serves to prepare the teacher for what might ensue if the objectives are not accomplished. Dörnyei and Kubanyiova (2014) stress the relevance of teacher vision, the teacher's ability to notice the disparity between their current and future selves, the need to safeguard the vision we, as teachers, have in the face of growing pressure or everyday threats in the teaching profession, and hope, as it sustains us along our professional journey.

1.2.Emotions and Emotion Regulation

Following motivational aspects related to teaching in general, as well as teaching foreign languages, this thesis also addresses teachers' emotional domain. The research at hand focuses on teacher emotions and their management in the classroom, both of which were previously neglected in favor of learner-based research. The increase in research aimed at teacher emotions and their regulation practices has provided us with a better understanding of their effects on teachers' well-being, relationship with the learners, performance, and other aspects of their profession. When discussing emotions, it is not easy to define what they are. What researchers, in general, do agree on is the fact that emotions are responses to certain stimuli that we receive from our surroundings. For instance, Gross (2015) claims that an emotion may imply different responses, ranging from experiencing grief when we lose someone, to dislike when we hear someone make a distasteful comment. More importantly, emotions will be instigated by a situation that we perceive as relevant to our goal(s) (Lazarus, 1991). When discussing the nature of emotions, authors such as Scherer (2005), Sutton and Harper (2009), and Hall and Goetz (2013) agree on the fact that emotions are multi-componential, meaning they consist of several elements. Let us use the five components of emotion proposed by Scherer (2005, p. 698): "cognitive component (appraisal), neurophysiological component (bodily symptoms), motivational component (action tendencies), motor expression component (facial and vocal expression), and subjective feeling component (emotional experience)".

As far as the educational context is concerned, emotions have a distinct and powerful effect on both learning and teaching. This means that emotions can either facilitate the processes or hamper them (Greenleaf, 2002). Moreover, Pekrun and colleagues (2007) hold that emotions come as a result of one's appraisal of what is going on in the classroom. Goetz and colleagues (2008) explained that teachers' cognitive appraisals rest on the following: 1) achievement behavior; 2) motivational engagement; and 3) social-emotional behavior. Frenzel's (2014) Reciprocal Model on Causes and Effects of Teacher Emotions is also based on the notion that cognitive appraisals cause specific emotions. The model outlines interrelationships between learners' behavior, teachers' emotions, and their instructional behaviors. According to Frenzel, teacher emotions are predominantly evoked by personal judgements of events and situations, instead of events and situations as such. For instance, pride is instigated in situations that are appraised as positive and attributable to oneself. Students and teachers alike experience diverse emotions during their working day;

furthermore, those emotions can be pleasant, such as joy, pride, or excitement, and have favorable impact on their performance and cognitive capacity. On the other hand, they can also encounter unpleasant emotions, such as boredom, anger, frustration, and find their effects to be adverse (Linnenbrink & Pintrich, 2000). L2 teacher emotion research has primarily focused on investigating teacher anxiety and stress (Horwitz, 1996; Bress, 2006, etc.). Subsequent research branched out to include other teacher emotions, such as happiness, pride, shame, or anger, which were tied to different factors, such as learners, colleagues, and institutions (Cowie, 2011; Xu, 2013, Timmer, Aguilar Río, and Schneider, 2015, etc.). Considering the dynamics of the teaching profession, as well as the diversity of emotions teachers are exposed to, quality of teaching has relied on teachers' ability to properly manage their emotions in order to ensure the achievement of their outcomes.

Emotion regulation, one aspect of affect regulation, is an intriguing phenomenon studied by numerous researchers, for example, Thompson (1994), Gross (2002), Koole (2009), and Schutz, Quijada, de Vries, and Lynde (2011), and others. As different interpretations of the concept will be provided in the theoretical section of this paper, presently, Gross's (2002) view of emotion regulation will serve as an introduction. Namely, Gross described emotion regulation as the process that aids in our attempt to shape which emotions we experience, when, and how we express them. In order to get a better understanding of what emotion regulation constitutes, let us observe Gross's model, which is considered most prominent and widely used. Gross (2002) introduced the *Process Model of Emotion Regulation* that put forth five points in the process of generating emotions, including: situation selection, situation modification, attentional deployment, cognitive change, and response modulation. Situation selection refers to the effort an individual makes to make it more or less likely to find oneself in a situation that would evoke pleasant or unpleasant emotions. Situation modification indicates an individual's attempts at direct modification of a given situation with the aim of changing its emotional impact. Attentional deployment indicates focusing one's attention in a specific situation to alter one's emotions. Distraction is one of the most notable forms of attentional deployment. Cognitive change represents a person's attempt to alter their assessment of a given situation so as to change its emotional significance. This can be achieved by modifying how one appraises the situation or how one assesses their ability to meet the requirements it presents. Response modulation refers to direct attempts to change one's experiential, behavioral, or physiological elements of the emotional response. The impact of unpleasant emotions, for instance, can be alleviated by

breathing deeply or engaging in physical exercise. Situation selection, situation modification, attentional deployment, and cognitive change belong to the group of antecedent-focused strategies, which means they are aimed at altering the emotional input before the emotional episode occurs. On the other hand, response modulation belongs to the response-focused group which is directed at changing the emotional episode once it has already arisen. To clarify further, the model shows a timeline during which emotions can occur and a person can, for instance, choose between situation selection, modification, deployment of attention, appraisal, and emotion response. The following form of emotion regulation, labeled emotional labor, will be explained through the lens of imposed rules of conduct and the desirable management and display of emotions.

1.2.1. Emotional Labor

The teaching profession is diverse, dynamic, challenging, and has, like any other profession, its rules of conduct. Teachers often work and live by a set of implicit rules imposed on them by the culture, community, educational system and the public perception of their vocation. To clarify, teachers believe they are expected to adhere to certain rules of profession, for instance, up-regulating pleasant emotions and down-regulating unpleasant ones (Williams-Johnson et al., 2008). Emotional display rules are based on what behavior the teacher considers appropriate in front of the leaners (Keller et al., 2014). For teachers, the effort invested in upholding these rules constitutes emotional labor. As stated earlier, the notion of emotional labor will be discussed in this context. First, let us define what it is; namely, emotional labor represents the process of managing one's emotions in order to allow for publicly observable display of facial expressions and body movement, according to Hochschild (1983). More in line with the introductory description is the definition proposed by Morris and Feldman (1996) who claim that emotional labor entails investing effort, planning, and management so that an individual could display those emotions that are considered acceptable in a certain organization while interacting with others.

To narrow it down to the teaching context, Williams-Johnson and colleagues (2008) describe teacher's emotional labor as a set of norms and standards that shape the teacher's display of emotions while being engaged in student interaction. What is important to note here is that teachers expend additional effort into embodying specific identities or roles in their classroom interactions. Now that the general nature of emotional labor has been portrayed, the following step requires focusing on its features. Hochschild (1983) proposed two types of emotional labor strategies, namely surface and deep acting. While the first involves a person's masking or faking of emotions, the second describes a person's genuine attempt to modify their inner emotional state so they could display desirable emotions. Though other authors (e.g. Brotheridge & Grandey, 2002) agree with these two components of emotional labor, Yin (2012) expanded the model by including a third strategy, namely, naturally felt emotions. To briefly illustrate, while surface and deep acting strategies involve faking, masking or inducing emotions, naturally felt emotions portrays a situation in which a person experiences and displays genuine emotions. The author's contribution was significant owing to the fact that teachers sometimes do not resort to either surface or deep acting, but choose to present their emotions as they are.

Several authors (e.g. Ghanizadeh and Royaei, 2015, Loh and Liew 2016, etc.) investigated emotional labor among EFL teachers; moreover, in these studies the phenomenon was examined in regards to other factors, such as burnout, teaching quality, and others. Another interesting point that will be discussed in the upcoming research is the effect of emotional labor on teachers and on their performance. Specifically, the focus will be on the effect specific emotional labor strategies have on teachers' emotional well-being. The topic has been discussed by other scholars, for instance, it has been found that surface acting contributed to teacher depersonalization and emotional exhaustion, while deep acting alleviated those adverse effects (Näring, Briët, & Brouwers, 2006). In addition, the act of engaging in an open display of emotions in front of learners was found to be positively related to pleasant emotions, such as pride or happiness (Taxer & Frenzel, 2015). The present research will attempt to investigate how often Croatian teachers of English, as a second language, engage in emotional labor practices.

1.3. L2 Teachers' Motivational Beliefs, Emotions, and Emotional Labor

This study focuses on two constructs in the 'motivational beliefs' domain, namely teacher self-efficacy and self-concept. To elaborate, two aspects of teacher self-efficacy are considered: 1) general teacher sense of efficacy and 2) foreign language teacher self-efficacy. As far as self-concept is concerned, the study considers notions such as L2 teacher ideal self, ought to self, and feared self. Apart from the motivational aspects, this research aims at investigating the emotional components of teaching a second language, namely the emotions experienced by L2 teachers, as well as their emotion regulation practices. To specify, both qualitative and quantitative segments of this study examine pleasant and unpleasant emotions reported by L2 teachers. In addition, they explore what types of strategies teachers engage in to cope with their emotional experiences. Particular focus is placed on emotional labor as a practice of displaying emotions in accordance with the rules of teaching.

Numerous studies carried out in recent years corroborate the relationship between motivational and emotional aspects mentioned. If we take teachers' identity for example, they undergo constant changes in the span of their professional careers. The formation and re-formation of their teacher selves is rooted not only in their self-awareness but also their perception of the teaching profession (Zembylas, 2003; Hong, 2010). Teachers' identities do not evolve separately from their emotions. Nias (1996) attests that teachers infuse their sense of self into their work. That type of 'investment' includes emotions which reflect how a teacher's identity is shaping. Some researchers, for instance Wolff and De Costa (2017), Schutz et al. (2009), Cross and Hong (2009), and Van den Berg (2002) discussed the relations between emotions and teachers' identity modification. According to the authors, teachers modify their beliefs according to the pleasant or unpleasant emotions that they experience in the classroom, among other things.

Scholars have also researched the relationship between teacher emotions, self-efficacy, and emotion regulation. Emotions involve appraisals regarding what is happening inside the classroom (Pekrun et al., 2007). Teachers use beliefs, goals, and values to determine where they are as opposed to where they would like to be (Schutz & Davis, 2000). The appraisals teachers make are linked to emotional episodes (Pekrun et al., 2007; Schutz & Davis, 2000). According to the authors, pleasant emotions, for instance, will ensue if the teacher appraises a situation as goal-relevant and if they believe they are in control, i.e. able to solve any possible issues. Teacher emotions have been researched in relation to teacher self-efficacy. Burić and Macuka (2017), for example, discovered that teachers who reported

higher levels of self-efficacy also experienced joy, pride and love when interacting with their learners. On the other hand, teachers that recounted feeling anger, fatigue and hopelessness more reported being less invested in their work. Taxer and Frenzel (2015) also found a positive correlation between positive emotions and higher levels of teacher efficacy and negative emotions and lower levels of self-efficacy, among other things.

Emotions were also investigated with regards to various forms of emotion regulation, such as emotional labor. As was mentioned earlier, teacher emotions are displayed with respect to the rules of teaching profession. Teachers are, at times, required to suppress or mask certain emotions in front of their learners. Also, teachers are expected to display specific emotions in their classrooms (Williams-Johnson et al., 2008). The difference between what the teacher is feeling and what they are required to show in the classroom can often present a challenge that Hochschild (1983) refers to as 'emotional dissonance'. Several researchers have documented the effect emotional labor practices have on teachers and the emotions they evoke. To illustrate, Burić, Slišković and Penezić (2019) suggested that positive emotions, such as love and joy, were positively associated with deep acting, whereas negative emotions, such as anger, were positively linked to surface acting. Other authors, such as Lee et al. (2016) and Lee and van Vlack (2017) reported similar findings in their studies focused on teacher emotions and emotional management.

1.4.Theoretical Framework of the Thesis

In order to examine Croatian English teachers' self-perceived confidence in their general and foreign language teaching abilities, the author relied on the frameworks proposed by Tschannen-Moran and Woolfolk Hoy (1998) and Swanson and Huff (2010). While the former framework relates to general teaching self-efficacy beliefs, the latter pertains to teacher beliefs regarding foreign language teaching. With respect to teacher self-concept, as the second motivational construct, the theoretical model introduced by Kubanyiova (2012), the Language Teacher Conceptual Change (LTCC) model, was used. This framework is based on the L2MSS proposed by Dörnyei (2005, 2009) as well as Markus and Nurius's (1986) possible selves theory which focus on one's idealized and feared self-image. When it comes to exploring Croatian teachers' emotions and their use of emotional labor strategies, two distinct sets of frameworks were utilized.

To exemplify, the teacher diary, intended for the qualitative portion of the study, was grounded in the research carried out by Chahkandi, Rasekh, and Tavakoli (2016). In terms of the quantitative segment, emotions were investigated with the help of the instrument adapted by Burić, Slišković, and Macuka (2018). Furthermore, the teachers' behavior related to the use of emotional labor strategies was examined by means of a scale that was originally proposed by Brotheridge and Lee (2003) and adapted by Yin (2012).

1.5.Research Aims

The general aim of this study is to investigate the relationship between second language teacher motivational beliefs and the emotions they encounter in the process of teaching and dealing with their learners. Moreover, the research also encompasses the emotional labor strategies they use to manage their emotions. Another aim of this research is to explore the role teacher emotions and emotion regulation have in explaining different motivational aspects of Croatian teachers of English, namely their self-efficacy beliefs and teacher self-concept.

1.6.Significance of the Study

It is hoped that the findings of this study will attempt to provide a more comprehensive insight into motivational and emotional aspects of teachers who teach English in Croatia. Specifically, the value of this study lies in its mixed-methods design which allows for the examination of emotions teachers experience in their everyday encounters with learners, as well as strategies they use to cope with the emotional episodes in an attempt to preserve their professional image. Furthermore, the study will also elucidate the relevance of the teachers' self-perceived confidence in their capacity to facilitate their learners' process of acquiring a foreign language, as well as in their knowledge of language. The findings will illustrate the significance of emotional labor strategies on teachers' efficacy to teach, as well as their self-perception, by focusing on the emotions they experience on a day-to-day basis.

Lastly, in addition to expanding the already existing pool of knowledge related to both these topics in the Croatian education setting, this study may also aid foreign teachers by showcasing the practice that can foster L2 teacher resilience.

Specifically, it can raise future and current teachers' awareness of their emotions, the relevance of emotion regulation process, increase their motivation, and foster their teaching efficacy.

1.7. Structural Overview of the Thesis

The first segment of the thesis is devoted to the theoretical overview of pertinent research related to motivational beliefs and emotional aspects covered in this research. The second section presents the aims of the research, followed by the methods section. Once the research methodology is explained, the results section follows. In the upcoming segment, the findings obtained are discussed in connection to relevant research. The conclusion section represents the final segment of the thesis where key findings and directions for future research are provided.

CHAPTER 2: THEORETICAL OVERVIEW

2. Theoretical Overview

2.1. Motivation

In life we often ask ourselves why people do the things they do and if there is something that makes them do it. To illustrate, Reeve (2009) posed a simple, yet an interesting, question – why do people exercise? The author considered several factors that might act as sources of motivation and he also explained how that motivation might affect their behavior. For instance, some people exercise because they want to accomplish a goal (e.g. athletes wanting to see how many miles they can cover in a certain amount of time), while others may want to attain a certain future self-image (e.g. observing other people exercise and wanting to be like them). These examples help us understand why motivation theories are important; moreover, they elaborate on the processes that drive and focus our behavior.

As stated in the introduction, the Latin word *movere* underlies the concept of motivation. This indicates the movement of our behavior toward an action (Melendy, 2008). With respect to the forces behind our behavior, namely the *motives* as Reeve (2009) calls them, it is important to note the difference between internal factors (such as needs, emotions, cognitions) and external events (for instance, cultural, environmental or social sources). These motives may affect and direct the way we behave. There is more, however, to motivation than motivating forces and resulting behaviors. Certain cognitive processes that lead an individual to start and maintain an action must be mentioned as well. Pintrich and Schunk (1996) attest to this by saying that a motivated person initiates an action with a certain goal in mind and then sustains it.

Motivation to learn a second language (L2) is a complex construct since it incorporates many elements including the language itself as a system and as a subject taught in schools, the learner's identity, emotions, as well as the cultural and societal significance of language (e.g. using the language in a certain community) (Dörnyei, 1998). In other words, an individual that starts learning a second language not only acquires another language system, but also develops an L2 identity with the elements of the L2 culture. One of the first attempts at defining L2 motivation is credited to Gardner and Lambert (1959) who described it as the enthusiasm and the effort that students invest in their process of acquiring a language.

The upcoming section will provide a historical overview of the theories and periods related to L2 motivation. The following sub-sections will discuss teacher motivation, as well as motivational components such as teacher self-efficacy and teacher self-concept.

2.1.1. Historical Evolution of L2 Motivation Theories

This segment will present a timeline of the development of L2 motivation theories. It will briefly illustrate earlier notable periods, such as the Social-Psychological Period, the Cognitive-Situated Period and the Process-Oriented Period with their respective key figures. Furthermore, the section will reflect on the current motivation perspectives involving a person-in-context relational view of motivation, alongside the L2 Motivational Self System and motivation from a complex dynamic systems perspective.

The Social-Psychological Period. This period was marked by the work of two Canadian social psychologists – Wallace Lambert and Robert Gardner. Their studies were based in the bilingual context where they observed languages as mediating factors that transected diverse ethnolinguistic communities (Gardner & Lambert, 1972). They saw L2 motivation as the driving force behind the desire to learn the language of another community. Furthermore, they suggested that learners' attitudes toward the L2 language and the community help shape their learning behavior; in other words, their learning practices could be facilitated or deterred by their attitudes and beliefs. What differentiated L2 motivation from some other, for instance learning geography, was the fact that the learner was not solely acquiring the knowledge of language, but also the cultural elements, ways of behaving, speaking, not to mention being willing to identify with the target group. Both Gardner and Lambert (1972) held that cognitive factors alone fell short of explaining the individual variability in L2 achievement and that motivation was key in providing additional information there.

Gardner's (1985) socio-educational model represented the next stage in the development of L2 motivation theory. He stipulated that L2 motivation consisted of: 1) motivational intensity or effort; 2) desire to learn the language; and 3) attitudes toward learning the language. The relation between motivation and orientation or goal was underscored. Specifically, orientations function as motivational precursors, which means that they help increase motivation and direct it toward a goal. The integrative motive was a major element in Gardner's theory and it encompassed integrativeness, attitudes toward the learning

situation, and motivation. The notion of integrativeness represents sincere interest on the part of the individual to acquire the second language so they could integrate better with the members of other groups (Gardner, 2001). An earlier interpretation of the concept involves one's willingness and show of interest toward social interaction with the members of other groups (Gardner & MacIntyre, 1993). Instrumental orientation, on the other hand, is represented as a means of attaining social or economic goals by learning a second language. For example, instrumentally motivated individuals decide to pursue language learning for the purpose of getting a better working position or earning a higher salary.

Barring the seminal work of Lambert and Gardner, this period was also symbolized by the works of Clément and colleagues (1977, 1992, 1994), Giles and Byrne (1982), and Schuman (1978, 1986). Brief descriptions will be provided for each of these authors' works. Clément's studies indicated that the notion of *linguistic self-confidence* affects an individual's motivation to learn and use another language in a multi-ethnic backdrop. Clément et al. (1977) stated that the quality and quantity of contact between members that belong to different communities was what affected language learning motivation. Self-confidence, being central to his theory, underwent a change through the years. Initially, self-confidence was observed as a social component with partly cognitive nature (speaker's perceived L2 proficiency). Afterward Clément and his colleagues (1994) explained that self-confidence is a pertinent motivational sub-system which is important in foreign language learning. Specifically, it is key in learning situations in which indirect contact with the members of the L2 community (e.g. through the media) outweighs the direct contact. The results of the study carried out by Clément et al. (1994) revealed the importance of self-confidence among Hungarian students, despite the lack of direct contact with members of the L2 community.

Giles and Byrne (1982) stated that the conditions under which members of minority ethnic groups acquire a dominant language in a multicultural setting can be observed through the scope of the intergroup model. According to the authors, factors such as the degree to which minority speakers identified with their ethnic in-group (i.e. a group to which said members identify as being associated with), and the interconnectedness of their in-group, would affect and dictate the extent to which they acquire their target language and how many target-like traits they adopt. The authors hold that minority group members will most likely attain a native-like proficiency in the (dominant) target language if, for instance, their in-group identity is weak, if their in-group vitality is low, or if the mobility between the in-group and out-group is easy.

Schuman's (1978, 1986) *acculturation model* resembles the previously mentioned model in terms of viewing minority group speakers in a multilingual setting; however, the difference is that Schuman's model focused on the individual and his social and psychological integration with the target group. Social and psychological distance are at the core of his theory; furthermore, the author claims that these two types of distance have a deleterious effect on the process of acquiring the target language. How much of the target language will be acquired depends on the degree of social and psychological contact the learner establishes with the target group. Factors that may contribute to social and psychological distance include social factors, such as integration between minority and majority groups, dominance of one group over the other, culture shock and others.

Clément, Noels and their colleagues (Clément and Noels, 1992; Clement et al., 2001) made further strides in their study on acculturation, multicultural environment, and ethnolinguistic identity. Their work was aimed at developing the *situated identity theory* which was based on various situational factors that may interpose the effects of macro-processes that operate at the societal level. Some situational events may involve quality and quantity of contact, awareness of ethnic threat, or the speaker's minority or majority status in their communicative setting. The work of these authors signaled a change toward the situational elements that affect both L2 motivation and L2 learning. This new direction will be further discussed in the upcoming section.

The Cognitive-Situated Period. The birth of this period was prompted by the growing dissatisfaction of scholars (e.g. Brown, 1990; Skehan,1989) with the social psychological approach to L2 motivation. There was a need for different perspectives in the study of L2 motivation and it was especially noted in the work of Crookes and Schmidt (1991) which openly criticized the social-psychological research avenue by stating that it had outlived its usefulness. The change in the research trend started at the beginning of 1990s and Dörnyei (2005) labeled it as the Cognitive-Situated Period in the following years.

With the new research movement came new trends: 1) aligning research on L2 motivation with the research in motivational psychology that focused on the cognitive aspect; and 2) switching the focus from ethnolinguistic communities and learners' attitudes toward language learning to situated analysis of motivation. These trends aimed to direct attention to more practical aspects, such as researching motivation in the context of the classroom as well as considering the issues teachers were facing. What is important to highlight is that the Cognitive-Situated Period worked toward widening its theoretical framework while infusing

it with cognitive aspects related to motivation. It did not, however, reject the perspectives that characterized the Social-Psychological Period. This shift kindled much discussion among authors such as Oxford (1994), Dörnyei (1994a, 1994b), Williams and Burden (1997), and Gardner and Tremblay (1994). This period will be portrayed in brief accounts of these scholars' work.

The first step toward changing the direction of L2 motivation research was made by Crookes and Schmidt (1991). The complex nature of L2 motivation was addressed in their thorough review of 140 sources of L2 and psychological research on motivation. They presented the work of eminent motivational psychologists in the L2 domain for the first time. In addition, the authors introduced a motivation framework which was based on the education-oriented theory of motivation by Keller (1983).

The framework synthesizes important research avenues related to motivational psychology and puts forward four distinct components: 1) *interest* which is tied to intrinsic motivation and is based on the person's desire to know more about themselves and their surrounding; 2) *relevance* which is related to how a person appraises the value of instruction in connection to their personal goals, needs or values; 3) *expectancy* which is closely associated with a person's self-confidence and self-efficacy; moreover, it focuses on how likely one's success is; and 4) *satisfaction* which indicates the outcome of some activity and is associated with both intrinsic (e.g. enjoyment) and extrinsic rewards (e.g. praises). Oxford and Shearin (1994) addressed L2 motivation research and its deviation from the rising trends in motivational psychology. In their attempt to provide a new and more expansive model of L2 motivation, they surveyed numerous branches of psychology, such as educational, cognitive developmental, and general. They ended up presenting a wide research perspective that involved various theories, such as need theories, value theories, reinforcement theories, social cognition theories, and achievement goal theory.

Dörnyei's (1994a) and Williams and Burden's (1997) frameworks were considered among the most influential in the 1990s. The authors relied on the findings from mainstream psychology and hoped to tie them to the area of L2 research. Dörnyei's (1994a) L2 motivation framework consisted of three levels: 1) the language level; 2) the learner level; and 3) the learning situation level. To illustrate, the language level enveloped various L2 elements, such as culture and community, as well as pragmatic and intellectual values tied to it. When it comes to the learner level, it involves the learner's personal traits and their influence in the process of learning a language. Lastly, the learning situation level considers different motivating factors pertaining to the classroom setting. The learning situation level

subsumes three types of motivational components which are: 1) course-specific (e.g. interest in the course, relevance of the course in relation to one's needs, etc.); 2) teacher-specific (e.g. teacher's personality, teaching style, etc.); and 3) group-specific (e.g. goal-orientedness, group cohesiveness, etc.). Each of these motivational components does not depend on the other components and can independently significantly affect overall motivation.

Williams and Burden's (1997) framework was grounded in the social constructivist tradition and it focused on motivational aspects related to L2 learning in the classroom. The framework categorized the motivational components into *learner-internal* and *learner external*. To further elaborate, the learner-internal category comprised of factors such as intrinsic interest of activity, perceived value of activity, mastery, self-concept, etc., while learner external consisted of significant others, the nature of interaction, the learning environment, etc. The authors' work was based on general motivation research rather than L2 research and as such it reflected the research trends of the 1990s. The Cognitive-Situated Period was marked by a rising interest in other areas of research as well, for instance attributional processes in L2 learning, self-determination, learner autonomy and task motivation.

The Process-Oriented Period. This segment will discuss motivation from a temporal perspective. In other words, it will consider the changing dynamic of motivation by focusing on the motivational processes that occur over some time. This concept is particularly interesting in the context of language learning which, by its nature, is a gradual and complex process that may take several years. The Process-Oriented Period was heralded and marked by the notable work of scholars, such as Williams and Burden (1997), Ushioda (1994, 1996a, 1998), and Dörnyei and Otto (1998). Their contributions to this period will be briefly illustrated in the following paragraphs.

Williams and Burden's (1997) study of motivation aimed to delineate two crucial aspects – *reasons for* doing something and *persisting in* that action. The authors wanted to investigate the motivation for engagement, for instance, the reasons, wishes, choices, as well as the motivation during engagement, which implied one's behavior, emotional state and responses in the process of learning. They suggested that the first level indicated the initiation of motivation, while the latter its sustainment. Both stages are quite distinct and should not be confused.

Ushioda's studies (1994; 1998; 2001) took L2 motivation research in a different direction. Considering how the quantitative research methods had been predominant among motivation researchers, she argued that a qualitative perspective was needed to explore the unique nature of L2 motivation. Her longitudinal interview study investigated motivational processes among Irish learners of French (Ushioda 1998, 2001). The findings of her study revealed that the majority of her participants mentioned positive past learning experiences as a key factor that shaped their motivation. Future goal-orientation was not prominent among the learners which suggested that it might be a separate dimension that was yet to develop. Ushioda's (1998) theoretical framework of motivation from a temporal perspective highlighted two distinct concepts that shape motivation: 1) motivation deriving from experience, such as positive experiences from learning L2, intrinsic affective rewards, etc.; and 2) motivation directed toward the future goals which denoted language-intrinsic goals, personal goals, as well as others.

Dörnyei and Otto's (1998)'s comprehensive framework of the process dimension of L2 motivation was considered the most intricate model at the time and was organized around a series of discrete events that partook in the initiation and execution of motivated behavior. The model consisted of two main dimensions: 1) action sequence; and 2) motivational influences. To illustrate, the action sequence dimension revolves around behavioral process indicating the change from one's wishes and desires into goals, which then turn into intentions, only to finally lead to action and the accomplishment of goals. The final phase would be the evaluation. Then, the motivational influences dimension focuses on the energy sources and motivational forces that drive one's behavior.

Furthermore, the authors broke the behavioral process down into three key phases: 1) pre-actional phase; 2) actional phase; and 3) post-actional phase. To explain, the *pre-actional* phase addresses the type of motivation that precedes the setting of one's goal. This phase has three sub-sections: goal setting, intention formation, and initiation of intention enactment. The relevant factors in this stage are learners' values linked to the learning process, attitudes toward the L2, beliefs, strategies, and other. Moving on to the *actional phase*, we can describe it as crossing over from planning and thinking about action to initiating it. The authors underscored three sub-processes during this phase: subtask generation and implementation, appraisal of various stimuli and evaluation of one's success, and the utilization of diverse self-regulating mechanisms in order to keep the motivation level up throughout the learning process. The final phase was labeled the *post-actional phase* as it

involves the retrospective analysis of the action accomplished. The emerging processes during this stage revolve around evaluating the action the learner has accomplished, as well as considering possible obstacles in future actions. It is also worth mentioning that the learner reflects on the initial plans and assesses what results they produced in the end. Based on this knowledge the learner forms causal attributions pertaining to the outcome.

Another interesting area within this period was related to the study of motivation across the lifespan. In other words, researching learners' motivation and experiences over a longer period of their lives. Such studies required a different methodological approach, which lead to the use of biographical and autobiographical methods in applied linguistics. Some notable longitudinal studies were carried out by Lim (2002) and Shoaib and Dörnyei (2005). Exploring motivational self-regulation was another avenue worth pursuing as scholars such as Dörnyei and Otto (1998) stressed the value of promoting and using self-regulation strategies to maintain motivation throughout the language learning process. Ushioda (1998, 2001) reported diverse thinking patterns and strategic mechanisms that the students in her study used to preserve their motivation. Among them were strategies such as engaging in positive self-talk and those used to rekindle learners' learning enjoyment by pursuing the tasks that they find intrinsically motivational.

Current Motivation Perspectives. The new era was signaled by the change of focus from motivational processes of L2 motivation to more complex, socially based, dynamic interacting systems. The new perspective took note of a wider setting which involved learning and using the language in the modern world. The *socio-dynamic phase*, as it is called, considered second, foreign, heritage languages, as well as global or lingua franca and tied them to the following new approaches of perceiving L2 motivation: 1) a person-in-context relational view of motivation; 2) the L2 Motivational Self System; and 3) motivation from a complex dynamic systems perspective. Each approach will be described in the sections below.

With regards to a *person-in-context relational view*, the discrepancy between this and the linear approach must be addressed. Unlike the linear approach to the study of L2 motivation, which puts focus on the identification of variables and notes cause-effect relations, the relational approach deals with the evolving network or dynamic system of relationships; moreover, these relationships are not linear, they cannot be predicted, and they are unique. Sealey and Carter (2004) elaborated on this view by stating that the relational

approach does not consider motivation as a phenomenon that is quantifiable or an individual difference. Rather, motivation emerges from our intentions and our dealings with the social world. With respect to the person-in-context view, Ushioda (2009) suggested a different perspective that accounts for naturally evolving relationships between motivation, context, and self.

The author explained that a person may exhibit numerous social identities when learning a language. She also stated that different identities can be relevant at different points and connected to motivation and L2 learning experience. To illustrate, a person may regard themselves as a language learner but this particular identity can be complimented by other identities, such as the one of being a mother, a doctor, or a wine expert. In addition, learners are observed as real people that exist in cultural and historical context. These elements help frame their identity and motivation.

Analyzing a person-in-context was initially appraised as challenging since the focus was not solely on the individual, but also on the surrounding contexts. The aim was to find and develop a strategy that would allow a more detailed study of motivation within the interactive context. For example, investigating classroom talk, such as teacher-student talk and student-student talk, was suggested as an adequate means of scrutinizing motivation between persons in context. According to Ushioda (2009), conversational analysis of this sort would yield interesting findings related not only to motivation, but also to context and identity.

Another approach that emerged was Dörnyei's (2005) *L2 Motivational Self System* (L2MSS). This framework was firmly based on the previous L2 research, as well as in the psychological theories of the self. Scholars invested in the study of L2 motivation had always regarded the language learning process as more than just acquiring a system for communication. They tied the language learning process with the individual or, to be more precise, with his or her identity. Dörnyei's (2005) framework drew from Gardner's (1985) research of integrativeness, as well as the psychological theories of the self, including the theory of possible selves proposed by Markus and Nurius (1986).

To illustrate, the possible selves theory stepped back from the current-self perspective and focused on what one would like, might and was afraid of becoming. According to Markus and Nurius (1986), the concept of possible selves relates to one's wishes, hopes, dreams, and it considers a person's unreached potential. These conceptions act as future-self guides as they focus on the dynamic notion that demonstrates how a person has moves from the present to the future. In other words, the notion of possible selves takes into consideration

how individuals envision their still unrealized potential, thus drawing from wishes, hopes, and fantasies. Higgins's (1987, 1998) theory put forth two possible selves, namely an ideal and ought-to self. To clarify, the ideal self pertains to the characteristics one would like to possess. This concept is directly tied to one's wishes, hopes, and aspirations. With regards to the ought-to self, it concerns the characteristics one is expected to have.

With regards to the L2MSS, it is comprised of three components: 1) Ideal L2 Self; 2) Ought-to L2 Self; 3) and L2 Learning Experience. The learner's *ideal L2 self* denotes an image of what they would like to become as an L2 speaker. This image serves as a strong driving force as the learner aims to reduce the gap between their actual and future self images. Next, the learner's *ought-to L2 self* pertains to the image of what they believe they should be like before others. In other words, what characteristics they should possess so they could conform to the expectations of others and avoid criticism. The L2 learning experience describes the immediate learning surrounding and the learner's experience which involves factors such as the classmates, the teacher, and the curriculum Dörnyei (2005). This framework drew from Higgins's (1987, 1996) *self-discrepancy theory* which also mentions the concepts of ideal and ought-to self. According to Dörnyei, people are motivated to reduce the discrepancy between their current and future selves. The L2MSS attracted the attention of many researchers who set out to investigate it further among their learners. One of those was a study conducted by Martinović (2013) whose goal was to test the L2MSS using Taguchi et al's (2009) questionnaire among Croatian university students. Upon confirming the validity of the instrument in the Croatian context, the author carried out a new study (Martinović, 2018) designed to examine English learning motivation among Croatian university students. In this study it was found that students with higher grade levels had higher levels of L2 motivation, a stronger ideal L2 self, and motives related to learning English for job success. In addition, females showed higher levels of L2 motivation, while students in certain fields of study showed lower levels of motivation, including biotechnical students. The study also found that the length of studying English could not explain the contrast in L2 motivation among the participants. The length of studying factor was shown to be insignificant owing to the fact that majority of Croatian students start learning English early in their schooling.

Some other studies conducted on the topic involve research by Thorsen et al. (2017) and Oakes and Howard (2019). Thorsen et al.'s (2017) research replicated the research by Williams et al. (2002) by utilizing multi-item questionnaire and administering it to learners from seven different secondary schools in Sweden. The instrument was designed to examine the learners' ideal and current L2 self, as well as their intended effort in school. According to

the results, the gap between the actual and ideal learner L2 self is lesser in grade 9 in comparison to grade 7. The disparity was shown to have negative effects on the learners' motivational approaches to learning in the classroom. The authors also stated that the learners' current and ideal selves become virtually identical by the end of grade 9 (15-16 years of age) so there is no discrepancy to speak of. This fact, however, does not exclude the process of self-revision among the learners. Namely, as they mature and progress through the education system, revisions of possible selves seem quite plausible.

Oakes and Howard's (2019) research is interesting in itself because it investigated the L2MSS system among learners of French. The study involved 522 university students of French and English in Sweden and Poland. The findings of the study showed that all participants confirmed that their motivation was multifaceted, i.e. consisting of more than one motivational construct that was at work at the same time. Moreover, despite the relevance of one's ideal L2 self, the results showed that the desire for proficiency was appraised as most important among the students. While the study noted that the L2MSS system encompasses motivation by examining two self-guides and L2 learning experience, it indicates the need for a wider range of motivational components (which may be activated in dependence on language and context).

The following section will discuss motivation from a complex dynamic systems perspective. This perspective rests on the *complexity theory*, hence the keywords such as complex and dynamic, which denote a specific strand of this theory – the *dynamic systems theory*. Before proceeding, it is important to explain the nature of dynamic systems. Such systems are deemed dynamic if they consist of two or more elements that are interconnected and that change over time (Ellis & Larsen Freeman, 2006; Dörnyei, 2009). The interactions between these elements produce numerous interferences that result in non-linear changes in the system's behavior. The following step is to conceptualize motivation within this perspective. Dynamic nature of motivation is related to a number of different factors that pertain to the learner, such as the learning task or the learning environment. Moreover, these factors are integrated into one complex system, namely the individual differences framework.

Individual differences (IDs) are characteristics or traits that distinguish a person from all the other people. The classic ID paradigm suggested that IDs were relatively stable, independent (not influenced by contextual factors) and learner internal (Dörnyei, 2005). However, Dörnyei (2009b) suggested that this is not the case. He stated that such belief seemed idealized and that it would not have merit from a scientific standpoint. IDs are not

isolated from contextual and temporal variation; furthermore, human characteristics or attributes have multiple components which interact with other components of different nature. For instance, motivational components may be comprised of emotional or cognitive components which would, as a result, create attributes that are of hybrid origin.

Another key aspect related to the notion of IDs is the *tripartite framework of learner characteristics* (Dörnyei, 2009b). Dörnyei elaborated on the dynamic nature of learner traits by highlighting three key divisions – between motivation, cognition and affect (which involves emotions). He stated that each of these should be considered dynamic systems that have complex interactions with one another and that are not isolated from the rest. This may be best represented by Buck (2005, p. 198) who stated that "emotions imply cognitions imply motives imply emotions and so on."

Higher-order motivational conglomerates. As explained by Dörnyei and Ushioda (2011), a systemic approach to studying motivation, which means identifying motivational conglomerates of higher order, is preferable to investigating specific motives in isolation. The conglomerates encompass both cognitive and affective factors that act as whole entities. This section will briefly address the following four motivational conglomerates: *interest*, *motivational flow*, *motivational task processing*, and *future self-guides* (Hidi & Renninger, 2006; Csikszentmihalyi, 1990; Dörnyei, 2003; Markus, 2006). Hidi and Renninger (2006) described *interest* as the outcome that comes from the interplay between a person and a certain content. According to the authors, the interest potential lies within the person, while the content and the environment shape the direction of interest and facilitate its growth. Interest has both cognitive and affective components. To illustrate, the cognitive component may pertain to the curiosity in and engagement with some content, while the affective component refers to the emotions one experiences, for instance, joy.

The following conglomerate, *motivational flow*, can be defined as deep involvement and focus on the task. Flow can be regarded as the highest form of task experience as the person engaged is fully immersed and feels detached from their surroundings (Csikszentmihalyi, 1990). Motivational flow occurs when a person has not only appraised a challenging problem and planned the steps necessary to complete it, but has also determined that the task is achievable and that they have the expertise and ability to complete it. Next, *motivational task processing* denotes the dynamics of learner interaction with the task; moreover, it points to the way learners process varied stimuli while working on different portions of the task and how they, eventually, decide on appropriate motivational strategies.

Dörnyei (2003) proposed a *task-processing system* that clarifies this dynamic process and breaks it down into the following mechanisms: 1) task execution; 2) appraisal; and 3) action control. To elaborate, task appraisal refers to the processing of a myriad of stimuli that the learner receives from the environment while gauging the ongoing performance (where it is now and how far it is from the desired outcome). Action control denotes the constant monitoring of progress; furthermore, should the progress halt, a series of self-regulatory strategies are enforced with the goal of protecting the learning-specific action.

Future self-guides represent a concept that unifies motivational, affective, and cognitive domains. Markus (2006) confirmed this by stating that the possible selves construct can be regarded as 'dynamic interpretive matrix for thought, feeling and action' (p. xi). MacIntyre and colleagues (2009) underscored the emotional domain of possible selves. They claimed that possible selves were inextricably linked to emotions and that without them they would be nothing but a cognitive construct lacking motivational capacity.

2.1.2. Teacher Motivation

In the past, there was a dearth of research on teacher motivation; however, a notable increase in the number of studies on the topic has been noted in recent years. The complexity of teacher motivation surpasses the one-dimensional notion of enthusiasm teachers used to have. Ubiquitous sayings such as "motivated teachers are effective teachers" fall short of conceptualizing what teacher motivation really is. Moreover, teachers' motivation can be gauged according to quantitative (e.g. "How motivated are you?") and qualitative elements (e.g. "What are you motivated to do and why?") (Hall & Goetz, 2013, p. 112). If we were to address how current research views teacher motivation, we would find three distinct domains: 1) concerns pertaining to teachers' career choice; 2) intricacies of the teaching process; and 3) relevant factors that affect the development of teachers and their students (Watt & Richardson, 2008).

Several theories exist that can help us comprehend the complexity of teacher motivation. It should be noted that these theories rest upon the basic principles related to those of general motivation. To somewhat narrow the focus, teacher motivation can be viewed through the prism of *expectancy-value theories* (e.g. Eccles & Midgley, 1989; de Jesus & Lens, 2005; Watt & Richardson, 2008), *goal-orientation theory* (e.g. Butler, 2007; Malmberg, 2008), goal-setting theory (e.g. Locke & Latham, 1990), and *self-determination theory* (e.g. Deci, 1992; Kunter et al., 2008). Alongside the theories listed, the teacher

motivation domain also comprises of the *social contextual* factors (e.g. Fives & Alexander, 2004), *temporal* changes, as well as processes related to *development* (e.g. Alexander, 2008).

In attempt to clarify the motivational factors that relate to the motivation to teach, Dörnyei and Ushioda (2011) outlined four key aspects: 1) an intrinsic component; 2) contextual factors; 3) a temporal axis; and 4) fragility (pertaining to negative influences). Though said aspects were briefly mentioned in the introduction section, more will be provided in terms of their relation to other research in the upcoming segments. Firstly, the **intrinsic component** of teaching may seem self-explanatory, but it is quite important. It denotes the inner desire of an individual to pursue a career in education, to share knowledge and experience. When asked why they opted for the teaching profession, many teachers will disclose their innate desire to do so – even from childhood. This has been confirmed by a large-scale study carried out by Dinham and Scott (2000). The authors revealed that the most frequent answer as to why the teachers entered the teaching service was that they always wanted to be teachers. A later study, conducted by Richardson and Watt (2006) confirmed those findings, while adding social contribution and shaping young people as the most prominent motivators. Csikszentmihalyi's (1997) division of rewards related to teaching confirmed some of the components mentioned by Richardson and Watt; furthermore, the author stated that the *educational process* was rewarding (working with students and observing changes in their performance), as well as the *subject matter* (improving one's own knowledge and abilities).

Deci and Ryan (1985) tied basic human needs, such as autonomy, relatedness, and competence with intrinsic motivation. Furthermore, the teaching profession meets the first two of these needs – a teacher is *autonomous* in their work and feels close and *connected* to their learners. The third component, labeled *competence*, relates to the notion of self-efficacy or the belief a teacher has in their abilities to teach and to positively influence their students' learning process. This efficacy can be broken down into the following: 1) teaching efficacy; and 2) personal efficacy (Dörnyei & Ushioda, 2011). *Teaching efficacy* can be defined as the beliefs a teacher has in their ability to facilitate their students' learning despite adverse conditions (such as issues at home). *Personal efficacy*, on the other hand, can be explained as the teacher's appraisal of their own efficacy as an educator.

As for the **contextual factors**, research conducted by Dinham and Scott (2000) yielded interesting results that helped the authors postulate two groups of contextual influences that affect teachers' motivation both on the macro-level and micro-level. To illustrate, the *macro-level* denotes a wide perception of the teaching profession (e.g. image of

teachers) and educational changes teachers are faced with. The *micro-level* is more focused around the institution where a teacher works; in addition, it underscores various elements in the teaching context, such as the school climate, class sizes, relations between colleagues, and so on. A study carried out by Fives and Alexander (2004) can be observed through the lens of the micro-level. Their research on 28 empirical studies investigating relations teacher motivation and contextual factors singled out teacher commitment and self-efficacy as the most prominent motivational components.

Temporal axis or the temporal dimension refers to the career path or longevity of the teaching profession which entails long-term achievement motives (Raynor & Entin, 1983). Raynor (1974) introduced the notion of a *contingent path* to describe the motivation process involved while embarking on a career. The *contingent path* was described as a sequence of activities by which one activity needs to be successfully completed in order to start a new one. In other words, "immediate success is known to guarantee the opportunity for subsequent career striving, and immediate failure is known to guarantee future career failure through loss of opportunity to continue that career path" (Raynor, 1974, p. 372). An apt example may be earning one's degree – taking one exam after another brings you closer to your goal. Moreover, Raynor has suggested that the effects of both intrinsic and extrinsic rewards are important components of contingent path theory. For instance, while love toward the profession and students may be motivating the teacher on his or her path (intrinsic motivation), there are other prizes, such as promotions, that facilitate their work (extrinsic motivation) as well. There is an interesting concept of *career ladder* mentioned by Pennington (1995), Alexander (2008), and Kubanyiova (2009). To delineate this notion, Pennington (1995, pp. 209-210) proposed a number of steps aimed at securing advancement along the contingency path: contributing to new curriculum, teaching a variety of courses, being responsible for introducing/developing new programs, to name only a few. Alexander (2008), however, argued that a suitable development model, depicting changes in the teachers' motives, cognition, as well as everyday practices in relation to their professional development, was in demand. Kubanyiova's (2009) research has made strides in the investigation of language teacher motivation and development which will be discussed later in the thesis.

The teaching profession can be quite rewarding; however, negative influences must also be addressed as they represent the **fragility** of teacher motivation. As pleasant as imparting knowledge, changing students' lives, and advancing through the ranks is, teaching is not without its drawbacks. For example, frustration, burnout, and boredom are some of the

challenges numerous teachers are faced with daily. Setting aside their professional development, teachers' psychological needs must be carefully considered if they are to perform their duties efficiently and enthusiastically. Studies such as the one conducted by Dinham and Scott (2000) revealed the dissatisfaction among teachers from the very start of their careers. This is due to their dissatisfaction, frustration, boredom, as well as lack of motivation to teach. Several scholars (e.g. Watt and Richardson, 2008; Kyriacou and Kunc, 2006) noted an alarming drop-out rate in the first five years on the job. This is not surprising considering the demands of the teaching profession, not to mention the better prospects of other vocations. The factors contributing to this unfavorable trend are stress on the job, restriction of teacher autonomy, lacking teacher self-efficacy, lacking career opportunities, and others.

The following sections will discuss the concepts of teacher self-efficacy and self-concept as relevant motivational factors. The section on self-efficacy will elaborate on the phenomenon among students and teachers, as well as provide the relevant research on the topic (in both general and L2 contexts). Furthermore, the second part will address the notion of self-concept among teachers, while primarily focusing on the work by Kubanyiova (2009).

2.1.3. Self-Efficacy

This section will elaborate on the general concept of self-efficacy by reviewing its origins, presenting major works and placing it into the educational context. The following part will focus on teacher self-efficacy by providing an overview of its development, as well as key studies. The last segment will narrow the focus even further to the notion of self-efficacy in the L2 setting. In other words, it will address the issue in the foreign/second language teaching context and provide a list of frameworks and studies conducted in that domain.

Self-efficacy theory rests upon the foundations of the social cognitive theory. Bandura (2001) highlighted cognitive, vicarious, self-regulatory, and self-reflective processes as crucial elements that relate to self-efficacy. The author argued that human beings have the capacity to organize themselves, to self-reflect, to be proactive, and to self-regulate. In addition, they are not simply led by their inner forces or the factors that come from their surroundings. At the core of self-efficacy theory are human beliefs; moreover, Bandura suggested that people's beliefs in their ability to do something will reflect on their motivation. To put it simply, if people believe their actions may generate positive influences and prevent negative ones, it will serve as a motivational catalyst that will make them react.

Furthermore, the level of one's self-efficacy is directly linked to the type of goal(s) one sets out for oneself, as well as the effort invested or willingness to persist should one encounter an obstacle.

In terms of perceived self-efficacy, Bandura (1997) defined it as the ability to organize and execute actions that are required to attain certain goals. Self-efficacy beliefs determine our motivation, well-being, as well as the sense of accomplishment. We will not be motivated to pursue a certain goal or engage with a demanding task unless we know our efforts will have a positive result (Pajares, Johnson & Usher, 2007). It should be clarified, however, that self-efficacy denotes self-perception or the belief of what can do, rather than the actual competence (Tschannen-Moran, Woolfolk Hoy, 1998). In addition to self-perception, there are other aspects of self-efficacy, such as perceptions of ability, social comparisons, perceived relevance, available time, and attributions. Our self-efficacy beliefs affect our choice of tasks, effort, resilience, persistence, and achievement (Bandura 1997; Schunk, 1995).

Bandura (1997) presented four sources of efficacy expectations: mastery experiences, physiological and emotional states, vicarious experiences and social persuasion. Each expectation will be concisely explained. First, *mastery experiences* or personal behavior history indicate that a successfully conducted performance in the past will result in stronger self-efficacy beliefs when encountering a similar task in the future. Based on the previous successful experience, the individual will be expecting a good result. The same applies in the case of negative outcomes. According to Bandura, mastery experiences are the most powerful source of self-efficacy beliefs. In addition, *physiological and emotional states* may also affect our self-efficacy beliefs. For instance, the higher our level of enthusiasm is, the greater the feeling of mastery will be. Conversely, the higher the level of anxiety, the greater our feeling of incompetence.

Vicarious experiences or modeling denotes basing one's self-efficacy beliefs on the model that is being observed. The degree to which one relates to the model affects their self-efficacy beliefs. To illustrate, if the model performs well, the observer's self-efficacy beliefs grow stronger. Should they perform poorly, their beliefs change concurrently. *Social persuasion* or pep talk is the final source of efficacy expectations and can be identified as feedback from a superior or colleague on the performance observed.

That feedback can have a motivating effect and can result in an increased effort in improving oneself, and being open to trying different strategies or methods, but also a demotivating effect, such as shying away from a task, or believing it cannot be done. The credibility, trustworthiness, and expertise of the person providing the feedback is of great importance.

Self-Efficacy Research Overview. This first segment will briefly outline the research that pertains to self-efficacy among learners, whereas the second one will discuss the construct in relation to teachers in more detail. In the education setting, studies by Bandura (1997) and Schunk (1995) determined that there is a correlation between self-efficacy and achievement outcomes. Furthermore, the research carried out by Pintrich and De Groot (1990) pointed to an association between self-efficacy and self-regulation and learning strategies. Their study showed that the use of self-regulation and cognitive strategies are related and that they may predict achievement.

With regards to instructional practices and their relation to self-efficacy, research conducted by Pajares (1996) and Schunk (1995) revealed that learners' self-efficacy may be facilitated through the use of diverse forms of instruction, such as social models, developing proximal and specific learning aims, verbalization and strategy instruction. According to the authors, these practices provide feedback to the students about their progress and helps them sustain their motivation during the learning process. In addition, the relationship between goal-setting and self-efficacy beliefs has also been established by Zimmerman, Bandura and Martinez-Pons (1992) whose findings showed the types of goals that positively affected learners' self-efficacy. To elaborate, short-term goals that are precise, exact, demanding but feasible, were more likely to promote self-efficacy among the learners than long-term goals that are considered less achievable. Students that set adequate goals, use strategies and monitor their progress are bound to exhibit higher levels of self-efficacy (Schunk, 1995). Interestingly, students' verbalization of the strategy they were applying increased their self-efficacy. In other words, by verbalizing what they are doing, the students focus on relevant task characteristics and work systematically.

Model observation has also been known to increase the learners' self-efficacy. Studies conducted by Schunk, Hanson and Cox (1987) and Schunk and Hanson (1985) suggest that learners that observe successful models believe that by repeating the same procedure they will duplicate that success. Also, it is vital that the observers note similarities between themselves and the model observed as it tends to strengthen the belief that they are capable of learning. It is important to mention the correlation between self-efficacy and performance

feedback. That type of feedback serves to provide the learners with the information on their progress, to promote their self-efficacy beliefs, and to keep their motivation level high. Schunk (1995) referred to attributional feedback as outcomes that are related to a single cause, or multiple perceived causes. To illustrate, let us consider effort vs ability feedback. A learner (e.g. young learner) will receive positive feedback once he or she has invested enough effort. In the case of ability feedback, it is given in a situation when the learner has grown and his or her abilities are being appraised. According to the author, the second example has a significant impact on the learner's self-efficacy because it signifies what they are good at (ability).

2.1.4. Teacher Self-Efficacy

The aim of this section is to present the concept and development of teacher self-efficacy research in general education, and to introduce research in foreign language teacher self-efficacy. The research on self-efficacy in the foreign language (FL) context has not always been the focal point of researchers; however, a steady increase in the studies published in that area has been noted in recent years. Before providing an overview of the origins of teacher self-efficacy and the theoretical background, an introduction to the notion of teacher self-efficacy will be given. *Teacher self-efficacy* can be defined as an opinion related to the teacher's abilities to facilitate student learning and engagement, particularly among the difficult and less motivated ones (Pajares & Urdan, 2006). Teachers' self-efficacy beliefs are inextricably tied to their performance and the results achieved (Tschannen-Moran, Woolfolk Hoy & Hoy, 1998).

As was previously mentioned, self-efficacy denotes a motivational construct that is based on perceived abilities rather than the actual ones. Accordingly, beliefs will predict behaviors and actions, not the performance itself (Barnyak & McNelly, 2009). Teachers, for instance, may appraise their teaching self-efficacy as higher or lower than some other assessment of their teaching abilities. Moreover, if they wish to fully utilize their skills, teachers should overestimate their actual abilities, exude enthusiasm, and invest additional effort in order to overcome any difficulties (Bandura, 1997; Tschannen-Moran et al., 1998). The same authors argued that teachers' self-efficacy beliefs not only affect their behaviors and instructional actions, but also the beliefs about the outcome of those actions.

Dörnyei and Ushioda (2011) divided the concept of teacher efficacy into teaching efficacy and personal efficacy. *Teaching efficacy* refers to the teacher's belief about the likelihood of generating student learning, and *personal efficacy* illustrates how teachers evaluate their own efficacy as educators. Teacher self-efficacy is described as cyclical, and the information about one's self-efficacy stems from the beforementioned four sources delineated by Bandura (1997). Teachers engage in information processing, which means they analyze the task at hand, alongside their personal teaching abilities. They take all of this into consideration when developing their teacher self-efficacy beliefs. Those beliefs have a strong impact on their behavior, choice of actions and persistence in the classroom. If a teacher believes they are in control, they expect a favorable outcome with certain students, they will devote more time to their preparation, and they will not falter when faced with obstacles. On the other hand, teachers with a lower level of self-efficacy, who do not expect to be successful, will not invest as much effort and time, and will give up, despite being aware of the strategies that could aid them (Tschannen-Moran & Woolfolk Hoy, 2007). The upcoming sections will address the development of the notion of teacher self-efficacy, as well as a wide range of studies carried out on the subject matter.

Teacher self-efficacy concept development. The origins of teacher self-efficacy date back to the 1970s, more accurately, to the studies that were conducted by the RAND Corporation (Bergman, Mc Laughlin, Bass, Pauly & Zellman (1977) which focused on researching the impact of education interventions. Their studies were rooted in Rotter's (1954) notion of locus of control which was used to measure the teachers' self-efficacy. To illustrate, the teachers either appraised themselves as having no influence on their students' motivation and achievement, or as having strong influence. The RAND Corporation's definition of teacher self-efficacy was as follows: "the extent to which teachers believed they could control the reinforcement of their actions" (Tschannen-Moran, Hoy & Hoy, 1998, p. 202).

Bandura's (1986) contribution fine-tuned the notion of teacher self-efficacy as it was presented within the socio-cognitive theory. This marked a new era in the development of teacher self-efficacy research. As stated earlier, Bandura (1997) posited that self-efficacy had to do with judgements of one's own capacity. The author also argued that a person's belief about their abilities has a greater impact on their achievement and motivation than their actual abilities.

The crux of his theory rests upon the fact that a person can affect their success by means of self-reflection and adaptation of behavior. In addition, Bandura (1986) discussed the notion of *triadic reciprocal determinism* which indicates that a person is shaped by the environment, as well as by individual factors (e.g. physiological conditions, emotions, etc.), behaviors, which interact with the environment. Moreover, four distinct influences, namely mastery experiences, vicarious experiences, verbal persuasion, and physiological and emotional states help form our self-efficacy beliefs (Bandura, 1997).

Tschannen-Moran et al.'s (1998) framework was based on a model consisting of Bandura's socio-cognitive approach and Rotter's locus of control. To elaborate on the model, the authors retained the sources of efficacy information mentioned above; however, it was accompanied by the teacher's *analysis of the teaching task* and *assessment of personal teaching competence*. In terms of the teaching task analysis, Tschannen-Moran and colleagues regarded it as pertaining to an external locus of control, indicating an assessment of the available resources (e.g. space, materials, technology) and the context (e.g. school leadership, students, their motivation). As regards the latter concept, assessment of personal teaching competence, the authors described it as the ability the teacher has regarding their capacity to complete the teaching task efficiently. In sum, all the components will affect the teacher's self-efficacy beliefs, their behaviors and actions.

Teacher Self-Efficacy Research Overview. Taking into consideration the number of studies that have been conducted on the topic of teacher self-efficacy to this day, a cross-sectional view of the research will be provided in this section. Each study will be briefly presented, and its importance will be explained. The first study to be mentioned was carried out by Gibson and Dembo (1984), whereby the authors constructed and tested for a valid instrument that could measure teacher self-efficacy and other notable teacher behaviors. They investigated teacher self-efficacy among primary school teachers; in addition, they regarded teacher efficacy as a factor that elucidates individual differences related to the efficacy of teaching. The factor analysis in their study revealed two prominent factors, namely the personal teaching efficacy and general teaching efficacy. Locke, Frederick, Lee and Bobko's (1984) study investigated how self-efficacy, goals, and task strategies affected the choice of goals and task performance. Their sample involved 209 undergraduate students enrolled in an introductory management course at the College of Business and Management, University of Maryland. The findings of the study revealed that the choice of goals was heavily influenced by one's ability, self-efficacy, and past experiences. Furthermore, self-efficacy was more tied

to one's past performances rather than future ones, albeit it also remained a relevant determinant of future actions.

Another interesting study was conducted by Guskey (1988) whose aim was to explore not only self-efficacy, but also self-concept and one's attitudes toward utilizing instructional innovations. A sample of 120 primary and secondary school US teachers partook in a staff development program which concentrated on mastery learning of instructional strategies, as well as instructional innovations. Specifically, the mastery learning entailed a whole-group instruction, which was followed by a diagnostic formative test. The test was created to help the students detect and correct their learning errors. The findings of the study revealed that teachers that considered mastery of learning strategies in line with their current teaching practices appraised them as easily utilized. However, teachers whose teaching practices differed from the instructional innovation practices rated them as less relevant and difficult to use. Bandura (1993) made a review of numerous accounts in which perceived self-efficacy impacted cognitive development and functioning. For instance, it was found that students' aspirations are shaped by their perceived ability to regulate learning process and master certain tasks. As for teachers, their students' level of accomplishment, as well as the working environment that they create, is determined by teachers' beliefs in their efficacy and the ability to facilitate learning and sustain motivation (Bandura, 1993).

Hoy and Woolfolk (1993) carried out a study that researched two aspects of teacher self-efficacy (general and personal), and its correlation to a healthy school climate. A total of 179 randomly selected primary school teachers from 37 schools in New Jersey took part in the study. The results indicated that teachers' personal efficacy (believing they could promote student learning) was reinforced by a positive climate in school. In addition, general teacher efficacy was positively affected by teacher morale and a school that protected its teachers from unreasonable demands coming from parents or community. Soodak and Podell's (1996) study aimed to explore the diverse nature of teacher self-efficacy by addressing dimensions of Bandura's construct of efficacy. The sample consisted of 310 teachers working at different levels of education (e.g. pre-school, elementary, and high school) in the New York metropolitan area. The authors delineated personal efficacy describes teachers' confidence in their ability to execute certain behaviors. With regards to teaching efficacy, it was defined as the teachers' beliefs about the influence that external factors, such as home and media, have on the teaching process. Outcome efficacy, as the third factor, indicated the teachers' beliefs in the fact that student outcomes were related to their actions. The findings of the study confirm that teacher efficacy consists of the three factors mentioned above. In addition, the

authors discussed the difference between their interpretation of those factors and that of Woolfolk and Hoy (1990). The study by Schmitz and Scwarzer (2000) was focused on the discrepancy between capable and less capable teachers. In other words, the authors investigated teacher self-efficacy by means of a newly constructed instrument designed to uncover what separated good from bad teachers. The instrument was tested in a longitudinal study that involved 275 German teachers and it showed good psychometric properties. To elaborate, the findings showed high negative correlations between job burnout and strain. Teachers that revealed high levels of self-efficacy provided more free time for their students as opposed to their less efficacious colleagues.

Gibbs (2002) set out to study teacher self-efficacy beliefs, and the effect such beliefs have on the teachers' ability to control their thoughts while teaching. The study underscored the importance of teachers' appraisal of their personal sense of control, alongside their abilities to control their thoughts in their classrooms. All the components listed determine how the teachers behave, feel, and instruct their students. The author stated that effective teachers are characterized by their competence in self-efficacy and action thought control. Also, self-efficacy mediates in explaining if teachers have the motivation to take action on what they know and what they can do. Looney's (2003) study focused on the relationship between teachers' overall efficacy (indicating instructional strategies, classroom management, and student engagement) and their perceptions of professional community in their place of work. The findings showed that all aspects of teacher efficacy were predicted by their common values and norms. Furthermore, perceptions pertaining to deprivatized practice (i.e. observing other teachers work in their classroom) impacted their instructional efficacy. Another interesting point was that the sense of professional community forecast the degree to which the teachers engaged in observation of colleagues and being exposed to their persuasive comments.

Another relevant study was carried out by Woolfolk Hoy and Burke-Spero (2005). The aim of the research was to track the changes in teacher self-efficacy beliefs among teachers in their early years on the job. The authors reported using a range of quantitative instruments that would aid them in their investigation, such as Gibson and Dembo's (1984) scale, Bandura's (1993) scale, and a newly designed instrument that incorporated distinct contexts and goals of the teacher preparation program. The results of the study revealed a high level of teaching efficacy during the teacher preparation program, as well as a low level of efficacy the first year in the classroom. According to the authors, the change in self-efficacy was explained by the amount of support the teachers received during the first year in

school. Tschannen-Moran and Woolfolk Hoy (2007) conducted research that concentrated on the precursors of novice and experienced teachers' self-efficacy beliefs. A total of 255 teachers (both novice and experienced) took part in the study. The participants were graduate students of three US universities (two in Ohio and one in Virginia). The results divulged that contextual factors, for instance interpersonal support or resources required for teaching, were integral part of novice teachers' self-efficacy belief system. On the other hand, that was not the case for more experienced teachers who relied on a variety of available mastery experiences.

Klassen, Bong, Usher, Chong, Huan, Wong, and Georgiou (2009) carried out an extensive study of teacher self-efficacy beliefs across five countries: Singapore, Korea, the U.S., Canada, and Cyprus. Their research was aimed at testing the validity of Teacher's Sense of Self-Efficacy Scale (TSES) in different contexts, as well as to explore the relevance of self-efficacy of teachers in diverse teaching situations. The authors tested for correlations between the three factors of the TSES (i.e. instructional strategies, classroom management, and student engagement) and job satisfaction. The results confirmed the viability of the scale and it showed similar relationship between the TSES factors and job satisfaction across different contexts.

A study by Moè, Pazzaglia, and Ronconi (2010) set out to investigate the relationship between teaching practice, teaching strategies, teacher self-efficacy, and positive affect. The authors argued that effective instruction does not ensure satisfaction; moreover, self-efficacy beliefs and positive affect are required to achieve it. They investigated their hypothesis among 399 primary, middle, and high school teachers in Italy. The instrument used was created to determine the use of efficacious teaching strategies and practices, teaching self-efficacy, positive affect, and job satisfaction. The authors found that teaching practice and job satisfaction were indirectly correlated; furthermore, these constructs need to be mediated by self-efficacy beliefs and positive affect. In short, higher levels of self-efficacy and positive affect are related to higher levels of job satisfaction. Skaalvik and Skaalvik (2010) conducted a study that incorporated some of the factors mentioned in the previous study (teacher self-efficacy and teacher job satisfaction), as well as others such as collective teacher efficacy, teacher burnout, and teachers' beliefs regarding external forces that may inhibit their success. The authors wanted to test the newly constructed Norwegian scale designed to measure teacher's self-efficacy, as well as to investigate the relations between teachers' perception of the school context and the factors listed above, namely collective teacher efficacy, burnout, and other. A total of 2249 Norwegian teachers employed in elementary and middle school

took part in their study. The results obtained showed the scale to be reliable and supported the multidimensional nature of teacher self-efficacy. In addition, a high positive correlation was noted between teachers' self-efficacy and their relationship with the parents. On the other hand, collective teacher efficacy was related to teacher autonomy, teachers' relationship with the parents, as well as supervisory support.

Among the more recent studies were the ones conducted by Dunn, Airola, Lo, and Garrison (2013), Minett (2015), Ağçam and Babanoğlu (2016), and Lavado (2018). To briefly exemplify, the study carried out by Dunn and colleagues (2013) set out to investigate the application of the DDDM (data-driven decision making) in relation to the teachers' efficacy and anxiety. A total of 1728 K-12 teachers from a Pacific Northwestern state partook in the research. The instrument used was labeled 3D-MEA and it was based on the following components: (1) efficacy for data identification and access, (2) efficacy for data technology use, (3) anxiety for DDDM, and (4) efficacy for data analysis, data interpretation, and the application of data to instruction. The findings revealed that the 3D-MEA was suitable to assess teacher DDDM efficacy and anxiety. The research also showed that the teachers consider the capacity to connect the data to classroom-based decision-making different from the ability to analyze and interpret it.

Minett's (2015) qualitative doctoral research focused on exploring sources of teacher efficacy beliefs. The author employed a social constructivist framework to base her study on. A total of 10 secondary school teachers from Essexx participated in 18 interviews. The research was conducted in two stages: the first included 8 teachers, while the second included 10. As for the findings, they showed that verbal persuasion, among a variety of sources backing the teachers' self-efficacy, was the most prominent source. This, according to the author, may be owing to the accountability culture that keeps growing in English schools. The finding is interesting in itself because it goes contrary to Bandura's (1997) theory which holds that mastery experiences are the most important source of self-efficacy.

Ağçam and Babanoğlu's (2016) study focused on researching primary school teachers' self-efficacy beliefs. A total of 100 teachers took part in their study. Moreover, the teachers worked in various primary schools in Turkey and taught different subjects, such as the Turkish Language, Mathematics, and EFL. The adapted version of the Norwegian Teacher Self-efficacy Scale was used to collect the data. The results of the study showed that teachers' self-efficacy beliefs are facilitated by means of obtaining professional experience.

Male teachers showed higher levels of self-efficacy when compared to their female counterparts when it comes to maintaining classroom discipline and student motivation. In addition, the authors stated that implementing curricular changes might be in order because novice teachers' self-efficacy levels are much lower than those of their more experienced colleagues.

Lavado's (2018) doctoral study discussed the influence of various factors, such as professional development, on the teachers' self-efficacy beliefs. The case study carried out by the author involved a sample ranging from five to a maximum of fifteen teachers employed in a K-8 Lutheran National Blue Ribbon School in the United States. Three types of measurements were employed to obtain the data: questionnaire, interview, and observations. According to the findings obtained, the author concluded that the teachers' effectiveness was greatly facilitated by professional development. In addition, the participants listed other relevant factors, such as amicable relations with colleagues, sense of vocation, as well as the divine call to teaching, that affected their self-efficacy beliefs.

L2 Teacher Self-Efficacy. Presenting and elaborating on the concept of L2 teacher self-efficacy and connecting it with relevant research falls under the scope of this section. The research outlined so far has shown the growing interest in the area of self-efficacy, particularly in the domain of mainstream education. This research has had a longer history compared to research on teacher self-efficacy in the L2 context. The self-efficacy beliefs of L2 teachers has not been adequately explored to this day, a fact evident from the limited number of published papers on the subject matter. Though the reasons for that might not be fully apparent, scholars such as Akbari and Abdenia (2009) have claimed that it might be partly owing to the fact that language teaching professionals did not have an instrument at their disposal that would measure foreign language teachers' self-efficacy beliefs. That has since been remedied as authors like Swanson (2013) managed to successfully design and utilize such an instrument, namely the Foreign Language Teacher Self-Efficacy scale. The scale has two subscales: content knowledge (the knowledge of foreign language) and teacher as facilitator (teacher's ability to engage the learners and get them interested in the subject matter). It is interesting to note that the research on L2 teacher self-efficacy initially revolved around the concept of teachers' language proficiency. To illustrate, one of the main factors that affected L2 teachers' self-efficacy beliefs and their ability to provide adequate instruction was their lack of language proficiency (Butler, 2004). There has been a widespread assumption among researchers that teachers' low confidence in teaching English stems from

their deficient language proficiency. Some studies, such as the ones carried out by Shim (2001) and Chacon (2005), addressed this very issue by attempting to establish the correlation between language proficiency and self-efficacy belief system. More information will be provided in the section below.

L2 Teacher Self-Efficacy Research Overview. This section will present a variety of papers and Ph.D. studies published in the area of L2 teachers' self-efficacy in the past fifteen years. The research will be ordered from earliest to latest and will primarily, but not exclusively, be focusing on self-efficacy beliefs of English as a Foreign language (EFL) teachers. Shim's (2001) study was directed toward establishing the relationship between the English teachers' language proficiency and self-efficacy beliefs. A total of 108 Korean middle and high school teachers participated in the study. According to the results, Korean teachers' self-efficacy beliefs were unrelated to their perceived appraisal of language proficiency. The author argued that further investigations of non-native English teachers and their self-efficacy beliefs were warranted.

The following study focused on the examination of self-efficacy beliefs of Venezuelan English language teachers. The researcher in question, Chacon (2005), attempted to carry out the investigation by modifying various scales, such as Tschannen-Moran and Woolfolk Hoy's (2001) Teacher Self-Efficacy Scale (TSES), Riggs and Enochs's (1990) Science Teacher Efficacy Scale (STES), and several others. The findings of the study countered those obtained by Shim and found that Venezuelan teachers' self-efficacy positively correlated with their perceived language proficiency. Another study in the L2 domain was conducted by Göker (2006) who set out to investigate the differences in teacher self-efficacy and development of instructional skills between two groups of student teachers (one group taking the peer coaching program and the other having normal supervisory visits) after EFL practicum sessions. The study involved 32 student teachers enrolled in a teacher education program in Cyprus. They were put into two groups: experimental and control. The results obtained showed that the experimental (peer coaching) group had higher levels of self-efficacy which suggested that such a program benefited student teachers greatly in terms of developing their autonomy. In addition, the experimental group was exposed to constant feedback which helped them adopt the instructional strategies as part of their teaching.

With regards to the non-English studies pertaining to teacher self-efficacy, Mills and Allen (2007) carried out a qualitative investigation of self-efficacy beliefs among 12 native/non-native French graduate teaching assistants. The participating teachers filled out a

survey and took part in an interview. Based on the results, the authors concluded that the participants showed a moderately high teaching self-efficacy; moreover, the teaching context positively affected their self-efficacy beliefs, alongside the contextuality of the teaching task (pertaining to teaching language and literature). A minority (two teacher assistants) assessed their teaching competence negatively. However, it should be noted that the teachers' perceived self-efficacy related to teaching literature was lower due to lack of mastery experiences in that domain.

Lee (2009) conducted an interesting study whose aims went in line with those of Shim (2001) and Chacon (2005). The study in question aimed to investigate Korean primary school teachers' confidence in teaching English. In addition, the teachers' English language proficiency, attitudes toward English, as well as Korean English education practice and policy were tested. Interestingly, the results of the study coincided with those obtained by Chacon, indicating that there is a strong correlation between teacher efficacy beliefs and teachers' English proficiency, along with attitudes toward English, which according to the author are precursors of teacher self-efficacy. A study carried out by Rastegar and Memarpour (2009), attempted to test the relationship between Iranian EFL teachers' self-efficacy and emotional intelligence. To further elaborate, the authors believed that teachers' self-efficacy beliefs would be facilitated through the development of emotional intelligence. The results of the study pointed to a strong correlation between teacher self-efficacy and emotional intelligence, thus suggesting that development one of these components will positively reflect on the development of the other.

When discussing more recent research, we can list studies conducted by Swanson and Huff (2010), Güngör and Yaylı (2012), Ghasemboland and Hashim (2013), Swanson (2013), Ghasemboland (2014), and Thompson (2016). To briefly illustrate, Swanson and Huff 's (2010) study is of great importance to the area of foreign language teaching since it introduced a newly designed scale intended for testing foreign language teacher self-efficacy. The study was conducted among a sample of 167 in-service teachers in Georgia and it was the first to utilize an instrument that focused on two distinct aspects of FL teacher efficacy: content knowledge and teacher as facilitator. The results of the study attested to the validity of the scale and the authors stressed that content knowledge alone may be insufficient when it comes to foreign language teaching. Teachers also need to know how to motivate and engage their learners if they are to teach efficaciously.

Güngör and Yayli (2012) conducted a correlation study designed to examine self-efficacy and anxiety perceptions among Turkish pre-service EFL teachers. The authors used the modified versions of Tschannen Moran and Woolfolk Hoy's (2001) Teacher Self-efficacy Scale (TSES) and Ipek's (2006) Foreign Language Teacher Anxiety Scale (FLTAS) on a sample of 77 pre-service teachers. The results of the study pointed to high levels of teacher self-efficacy among the respondents, however, a notable high level of anxiety was noted in relation to their speaking and listening skills, as well as their overall level of English. Ghasemboland and Hashim (2013) carried out a study that focused on non-native EFL teachers' self-efficacy beliefs and their proficiency in English. Two questionnaires, measuring teacher self-efficacy beliefs and their reported English language proficiency, were administered to 187 teachers working in different language centers in one Middle East country in Asia. The results of the study showed a positive relationship between the teachers' self-efficacy beliefs and their English language proficiency. In other words, by improving their language proficiency, the teachers can boost their confidence in teaching a foreign language.

Swanson (2013) utilized the aforementioned instrument (Swanson & Huff, 2010) in a second study on 47 pre-service teachers at Georgia State University in Atlanta, Georgia, USA. The investigation tested their self-efficacy at the beginning of the teacher education program and a year after the program's completion. The findings pointed to an increase in the teachers' content knowledge (their knowledge of English) self-efficacy over time, as well as varied results pertaining to student engagement and classroom management. Ghasemboland's (2014) doctoral study set out to investigate the self-efficacy beliefs of 187 English teachers employed in various language centers in one Middle East country in Asia. Furthermore, their self-appraisals were related to their reported use of different teaching strategies, their proficiency in English, and some background traits, such as age, gender, years of teaching, level of education, and other. This study also relied on the framework proposed by Tschannen-Moran and Woolfolk Hoy (2001), alongside Tschannen-Moran, Woolfolk Hoy and Hoy (1998). The results showed a high appraisal ofself-efficacy among teachers. Furthermore, the teachers were more efficacious in classroom management than in instructional strategies, or in student engagement. In addition, the teachers' proficiency levels related to reading and listening were higher than those pertaining to speaking and writing. The results also revealed that the teachers primarily relied on the use of mechanical, rather than communicative, strategies when instructing students.

Thompson's (2016) doctoral research aimed at examining 141 Japanese high-school English teachers' self-efficacy beliefs pertaining to teaching English. The teachers came from 27 prefectures across Japan. The author distributed an online version of the survey and finally obtained 135 valid responses. According to the results, there were five distinct dimensions of teacher self-efficacy beliefs: Using English, Communicative Teaching, Teamwork, Student Achievement, and Managing Workload. Teachers in the study exhibited less confidence in their ability to cope with the workload.

Furthermore, positive associations were observed between higher self-efficacy appraisal (related to either of the dimensions) and factors such as years of working experience, time teachers spent abroad, and having experience with communicative language teaching as a student and teacher. The research also implied that there will be no significant relationship if personal or contextual factors do not affect the task or perceptions of task difficulty. Conversely, stronger self-efficacy beliefs were noted in regards to substantial experience with the task or the skills that inform the task.

2.1.5. Future Self Guides

The goal of this section is to introduce and discuss the notion of self-concept, more precisely, the theory of possible selves. Possible selves are frequently regarded as future self-guides however it should be stated that the guiding function is not present in every type of possible self (Dörnyei & Ushioda, 2009). To illustrate, unlike the 'ideal self', which exhibits a guiding function in setting certain standards a person aims to reach, the 'could become self' predicts what is likely to occur in a given situation. More on these notions in the upcoming sections. Self-concept will be briefly mentioned with regards to the language learning process (i.e. learner self-concept); however, the main focus will be on teacher self-concept, particularly, L2 teacher self-concept. The most notable research pertaining to this area will be presented, including the seminal work carried out by Kubanyiova (2007) who proposed a framework encompassing L2 teacher possible selves.

The notion of self-concept has been widely researched in psychology. According to Higgins (1996), psychology experts were captivated by the concept of 'self'. Though numerous terms related to the 'self' exist, the study of *possible selves* and *future self-guides* (Higgins, 1987, 1998; Markus & Nurius, 1986) remains quite prominent, especially in regards to motivation research. This is due to a growing interest and scientific work in the area of personality psychology. More to the point, psychologists have determined and

outlined the stable dimensions of personality and that has given rise to further research aimed at answering how our personality traits relate to our behavior (Dörnyei, 2009). There have also been noticeable changes in the realm of self-representation and self-system in general. To elaborate, a previously favored static concept of self is being replaced by a dynamic, active self-system that determines current behavior (Markus & Ruvolo, 1989).

The notion of possible selves needs to be addressed at this juncture. Hoping to explain how the self affects the way we behave by means of setting one's goals and expectations, Markus and Nurius (1986) devised a new theory that illustrates how people imagine their 'selves' that have not yet been realized. The theory also incorporates people's dreams, hopes, and fantasies. In essence, the theory denotes a person's idea of what they might become, what they would like to become, and what they fear of becoming. Carver, Reynolds, and Scheier (1994) considered this idea as unique since it refers to future self-states rather than current selves. Imagination, according to Yowell (2002), affects a person's behavior in a way that they start bridging the gap between their current and future self.

Markus and Nurius (1986) made a distinction between the following elements of possible selves: 1) ideal selves that we would like to become; 2) 'selves' that we could become; and 3) 'selves' that we are afraid of becoming. The authors exemplify and contrast the two opposing components, including ideal self and feared self. An example of an ideal self might be a rich self or a creative self, while a feared self might evoke an image of a depressed self or an unemployed self. It is important to note that the elements listed are linked to the present; in other words, although they bear the label 'possible' self, they do not denote a complete fantasy. Furthermore, the authors deliberately created a general concept of possible selves rather than a complete taxonomy because they constituted hoped-for and ideal self as two distinct entities. Markus and Nurius also suggested the notion of 'ought selves' which is an image of oneself in the eyes of others. According to the authors, possible selves are quite palpable, indicating that people can hear, taste and smell them. They are a reality to an individual and these conceptualizations are depicted, in terms of semantics and imagery, the same way as their current self. Markus and Ruvolo (1989) further suggest that setting future goals and tying them to actual experiences is beneficial in the process of goal-directed behavior.

The earlier mentioned role of imagery or imagination is a key element in the framework of possible selves. Imagination and its association to motivation date back to the ancient Greeks where we may refer to Aristotle who claimed that imagination is 'sensation without matter.' It can be stated that one has to imagine something first before desiring it (Modell, 2003). The power of mental imagery lies in the fact that the goal we set out for ourselves may be turned into specific (instrumental) actions by envisioning our actions through the formation of possible selves that attain that very goal (Markus & Ruvolo, 1989). A very apt description of imagination was found in Wenger, 1998, p. 176) who stated that "Imagination in this sense is looking at an apple seed and seeing a tree." Another interesting way of illustrating the central role of imagery in the possible selves conceptualization is by seeing it as a mixture of self-concept and fantasy (Segal, 2006).

Future self-guides. The notion of possible selves that highlight the guiding function, rather than the predicting one (i.e. could-become), will be discussed in this section. Specifically, two central elements are as follows: *ideal selves* and *ought selves*. Authors, such as Markus and Nurius (1986), Higgins's (1987, 1998), and Boyatzis and Akrivou (2006), will be referenced in the process of expanding on the concept of future self-guides.

Higgins's (1987, 1998) *self-discrepancy theory* addressed the motivational aspect of the two self-guides, namely the ideal and ought-to self. There is a third domain and it is called the actual self. Higgins claimed that one should also be aware of self-state representations, i.e. consider whose perspective on the self is involved. There are two basic standpoints: 1) your own; and 2) that of significant other (mother, father, siblings). According to the self-discrepancy theory, people are motivated to attain a state where their self-concept corresponds to their personally-relevant self-guides. The theory also suggests that people feel uneasy when they become aware of the disparity between their real-life self and their future self. In addition, wanting to alleviate the feeling of unease, they become motivated to decrease the gap between the two different selves. According to the author, such a source of motivation can be quite powerful.

The concept of future self-guides, ideal and ought selves need to be elaborated on. The ideal self presents the characteristics a person would ideally like to possess, according to Markus and Nurius (1986). Ought self, on the other hand, may not have much in common with the person's own wishes and desires as it represents the characteristics one believes he or she ought to possess (e.g. portrayal of someone else's duties or responsibilities). Interestingly, there is a divergence in how these authors conceptualize the possible selves.

While Markus and Nurius (1986) claim that an individual may have more than one possible self, Higgins (1987) holds that there may be only one distinct possible self per person.

The difference between ideal and ought self tends to come across as vague and confusing according to Boyatzis and Akrivou (2006) who stated that social factors may exert an influence over our behavior, especially with regard to the conceptualization of the ideal self. To further elaborate, we all live by the social norms of the group we belong to, so it is sometimes difficult to discern whether our ideal self stems from our wishes or the influence of society. In other words, the internalization of one's ought-to self is affected by our adherence to group norms. Dörnyei (2007) corroborated this standpoint by explaining that we, as social beings, conform to social norms around us and that there is pressure to modify our possible selves to a certain degree.

Alongside the complicated interpretation of possible selves, a change in the conceptualization of ought self must be mentioned. Initially, the notion of ought self carried a positive connotation, meaning that it was described as the 'person I believe I should be' (Higgins et al., 1985). Later, Higgins (1996) modified the view of ought self and suggested that it may comprise a negative note, for instance, 'the person I do not want to be.' This modification made it resemble the concept of feared self that was proposed by Markus and Nurius (1986).

Learner future self-guides. This section will consider learner future L2 self-guides in relation to language learning motivation. The importance of imagery as a strong motivator has been discussed earlier in the text. This notion has been modified for the context of language learning and is reflected in Dörnyei's (2005, 2009) framework called the L2 Motivational Self System (L2MSS). Dörnyei (2005) suggested a new framework that was based on the research of the 'self' in psychology, as well as L2 motivation. The author considers the new framework a timely progression from Gardner's theory. Namely, the seminal work of Gardner and Lambert (1959) that introduced the concept of integrativeness/integrative motivation has been quite influential for a long time. Dörnyei held that the new approach would help resolve some of the concerns related to the explanatory power of Gardner's theory. According to the model, there are three core components of which may help explain L2 learner motivation. The components are as follows: 1) Ideal L2 Self; 2) Ought-to L2 Self; and 3) L2 Learning Experience. To illustrate, the notion of *ideal L2 self* implies a powerful motivating force related to a learner's visions of what they would like to become (e.g. a person that speaks the L2 proficiently). In terms of the *ought-to self* image,

it represents the characteristics a learner believes they should possess in order to evade negative outcomes. As was previously mentioned, such an image might not coincide with the learner's desires or wishes. The third component, labeled L2 learning experience, present the learner's motives in relation to their immediate learning context, including the effect of the teacher, curriculum, and peers. Dörnyei's proposed model merges the vision and its experiential nature. While the first two images listed refer to the future self, the third relates to the experiences of the actual self.

Even though learners may have future self-images in their minds and despite the fact that such visual imagery may have a strong motivational influence, this will not guarantee their cooperation or participation in class. This may leave many teachers baffled and in search of possible answers. Dörnyei and Ushioda (2011) listed key prerequisites that would ensure the creation of L2 vision among learners. A learner needs to create a desired future self-image in their mind. The image of their future self needs to sufficiently differ from that of their actual self. The future self-image needs to be meaningful and detailed in their mind. Furthermore, such an image needs to be plausible. The learner needs to believe that a certain action is required to attain the vision. Their self-image needs to be based on realistic expectations, or substantiated. This is achieved by performing rational assessment and being aware of possible issues that might arise along the way and hamper the realization of the ideal self. Also, the learner's future self-image should not be in conflict or opposed to the other components of their self-concept, such as ought-to self. Once the future self-image is created, the student should put a plan in place as to how they will go about reaching that goal (e.g. using strategies). The learner needs to regularly activate that future self-image in their current self-concept. Lastly, alongside the desired future self-image, the learner needs to have a feared self-image as well because such an image will remind him of the repercussions of failing to achieve the earlier set goal.

Teacher future self-guides. Akin to the section above, this segment will focus on the language teachers' cognition and motivation. To be more precise, it will portray how teachers' way of thinking and understanding of teaching practices relates to their motivation to teach. Furthermore, it will consider the concept of possible selves in connection to Kubanyiova's (2012) Language Teacher Conceptual Change (LTCC) model.

Firstly, when examining teacher cognition, we will find that it is comprised of various elements, such as what teachers "know, believe, and think" (Borg, 2003, p. 81). Diversity in classroom behavior is tied to teachers' thoughts on a variety of subjects, for instance, the

language they teach, their students, themselves, or the teaching context. A teacher is influenced by a plethora of external forces that affect their behavior in the classroom. The extent to which a teacher transforms the language classroom into an environment that promotes learning is dependent on their earlier thoughts, their beliefs about the study of language, images, memories, and models they observed with regards to teaching (Dörnyei & Kubanyiova, 2014).

One of the most prominent influences in teaching are the images that teachers construct which will affect their instructional choices, as well as the opportunities they choose to present in their classroom (Dörnyei & Kubanyiova, 2014). The notion of guiding images is a prevalent one given that teachers' ideology related to teaching is rooted in their past experiences when they were young (children or pupils) and as student teachers, as well as their expectations for the future (Goodman, 1988). If we consider pre-service teachers, Stuart and Thurlow (2000) believe they should already have a clear image of what their future classroom might look like. Hoping to foster learning and conceptual change in future teachers, Dörnyei and Kubanyiova (2014) suggested that teacher trainers be mindful of the following: the course should be designed in a way that it coincides with the students' vision of who they want to become as teachers (vision). Additionally, the teacher trainer must bear in mind that pre-service teachers prefer the safety of their comfort zones, therefore, they must encourage them to step out of it (showing the dissonance). They should also provide them with a safety net, meaning that their students should be given enough time to practice and to observe other models before stepping into the real-life classroom.

Teacher motivation has not always been at the forefront of motivation research. Initially, the research was solely focused on learners; however, it has since been established that teacher motivation is directly linked to student motivation. In the words of Dörnyei and Ushioda (2011, p. 158), "if a teacher is motivated to teach, there is a good chance that his or her students will be motivated to learn." Kubanyiova (2012) argued that teachers need to be motivated in order to provide quality instruction, create a positive classroom environment conducive to student learning, and to invest their mental energy into self-reflection and further development. There is much more to teacher research than simply investigating their job-related stress or their job satisfaction. The author carried out research among Slovakian EFL teachers and its aim was to examine the teachers' motives for entering the teaching profession.

She found that the two most prominent elements were love for the English language and the desire to be appreciated (Kubanyiova, 2006). Her continuing work was based on the premise that if one was to comprehend why teachers decided to teach, they would need to probe into the imagery of what they wanted to become. This realization led her to propose the ideal language teacher selves framework (Kubanyiova, 2012).

Both students and teachers construct different imagery related to themselves in future states. These images can be positive, for instance, indicating their hopes and dreams, or negative, such as worries and fears. Hoping to elucidate the various possible selves among language teachers and their impact on teachers' development, Kubanyiova (2012) proposed the Language Teacher Conceptual Change (LTCC) model which comprised of three elements: 1) the ideal L2 teacher self; 2) the ought-to L2 teacher self; and 3) the feared L2 teacher self. To clarify, the *ideal L2 teacher self* represents the teachers' hopes, aspirations and goals. Accordingly, motivated teachers will strive to reduce the gap (discrepancy) between their current and future selves. The second component, the *ought-to L2 teacher self*, implies that teachers' images of themselves are dictated by the expectations of others, such as students, school policies, or their obligations and normative pressures. The ought-to label stands for the image the teachers believe they should live up to (i.e. who they should become). The final element is called the *feared L2 teacher self* and it serves as a kind of a warning to the teacher, indicating what they might become if their goals are not attained.

It should be clearly stated that L2 teachers' conceptual change is a gradual process and it might not always coincide with the latest methodological advances. In other words, accepting and implementing a new approach or method might not always be possible due to the teachers' self-images. Kubanyiova (2012) provided several arguments why that might be the case, for example, if a new technique is appealing but goes contrary to a teacher's image of what they would like to become, it will not be adopted. She described it as the 'Nice-but-not-for-me' argument. Furthermore, the teacher might not embrace the new idea if they do not perceive a gap between their current and future self-image (no discrepancy or emotional dissonance). Such a teacher would opt not to invest mental effort into something they believe they are already doing.

Another reason for not adopting new material would be the threat it poses to the teacher's identity. To illustrate, a teacher may be inclined or pressured to alter their future self-image that was stimulated by the new material, however, they soon begin to realize that such an image threatens other self-images they may have and opt out. The teacher in question will not pursue the matter further if they deduce that there are more disadvantages than advantages.

L2 Teacher Self-Concept Research Overview. This segment will provide an overview of research related to L2 teacher self-concept. While a number of studies will be portrayed (e.g. Golombek & Johnson, 2004; Hiver, 2013), the majority will be devoted to the research carried out by Magdalena Kubanyiova; moreover, her findings pertaining to L2 teachers' future self-guides are of particular interest for this body of research. The first study to be presented is the one conducted by Golombek and Johnson (2004). The aim of their research was to examine L2 teachers' cognitive and emotional dissonance through narrative inquiry. The teachers' written narratives allowed them to reconceptualize their own identity as teachers, as well as question the things they had learned in the past. Furthermore, this line of inquiry was designed to investigate how the teachers internalized some activity, how it affected them, whether they used it in some other context, and if they were able to surpass their concept of idealized teaching. According to the authors, narrative inquiry is a valid tool for teacher development; furthermore, there is a strong relationship between teachers' cognition and emotions, meaning that their emotional dissonance made them perceive their cognitive dissonance.

The following study carried out by Kubanyiova (2006) was longitudinal and it employed a mixed methods approach. The aim of her research was to examine the cognitive and behavioral changes of eight non-native English teachers in Slovakia after taking an in-service teacher development course. The course lasted for 20 hours and it was rooted in educational psychology, the theory of L2 motivation, as well as group dynamics. The results of the study pointed to an absence of discernible change among the teachers related to their teaching practices. The author noted that despite the teachers' visible motivation throughout the course, it must not have been adequate to facilitate changing their way of teaching. In addition, it is not uncommon for L2 teachers to regard teacher development courses as simply a means of honing their linguistic abilities, rather than their teaching practice. According to Kubanyiova (2006) they lack the necessary skills required to engage in articulated reflection and that was what also hindered their process of change.

Encouraged by the findings of her previous study, Kubanyiova (2007) set out to investigate L2 teacher development further by establishing a model designed to promote conceptual change. The research was part of her doctoral dissertation and it was a longitudinal, mixed methods research in nature as it utilized quantitative and qualitative measures. Its aim was to examine the impact of the previously mentioned 20-hour in-service teacher development program on the teachers' conceptual change. The results obtained in the previous study (Kubanyiova, 2006) indicated that no conceptual change had occurred. Eager to substantiate these findings, Kubanyiova (2007) examined the qualitative data further which led to the development of the Language Teacher Conceptual Change (LTCC) framework. The author found that the teachers' identity goals affect every aspect of their professional work and that they also impact the way language teachers perceive themselves and their students, approach their work and professional development, and how they internalize reform input. In order for language teachers' conceptual change process to start, they need to notice the discrepancy between their current and future teacher self. Kubanyiova also suggested that the education system needed to be changed to promote their (and that of pre-service language teachers) self-efficacy beliefs pertaining to their teaching practice and development. Kubanyiova's book (2012) provided a detailed overview of the aforementioned research project. More to the point, it comprises the theoretical foundation of L2 teacher conceptual change, alongside the research data itself, for instance, interview excerpts, methodological memos, or the teachers' profiles.

The qualitative study conducted by Hiver (2013) relied on Kubanyiova's research on possible language teacher selves and set out to investigate teacher development of seven in-service Korean teachers of English through the lens of possible language teacher selves. The results revealed that the teachers constructed varied images of their actual and future selves. Furthermore, the teachers' desire for development was triggered by their lack of self-efficacy (both personal and in teaching). In terms of self-concept, the teachers primarily engaged in teacher development to improve on their shortcomings, as well as to enhance themselves. Another motive revolved around the notion of conforming to norms; however, it was not as prominent as the two mentioned earlier.

Another interesting study on self-concept and motivation of novice EFL teachers was conducted by Kumazawa (2013). This in-depth interview study was carried out among four novice EFL teachers in Japan. The results obtained indicated a diversity in ideal teacher self-images among the teachers. For instance, in their interviews and e-mail correspondence, some of the images revealed by the respondents revealed they wanted to become English

teachers, teachers that used CLT, or educators. What was interesting about this study was that, unlike previous studies, Japanese novice EFL teachers' ideal self-guides had little effect on their motivation. In addition, the discrepancies between their ideal, ought-to, and current selves had demotivating side effects. Nonetheless, this discrepancy helped initiate a self-reflection process among the teachers which led them to reconceptualize their self-concept and rekindle their motivation.

Dörnyei and Kubanyiova (2014) dedicated two chapters of their book to the transformational capacity of L2 teachers and their motivation. In other words, the way we experience teaching (e.g. seeing, hearing, feeling), in conjunction with our teaching vision (who we aspire to become), can have a significant impact on our teaching. The authors proposed a framework for motivating teachers through vision, which is a key component, and they also addressed the notion of safeguarding that vision or becoming resilient by means of vision boosters. To briefly illustrate, the authors delineated numerous practical examples that teachers may use as part of their development to guide their visions and practices. One of them is called the language teacher's 'Golden Circle'. This activity poses three key questions within three layers of a circle: 1) WHAT do inspirational teachers do?; 2) HOW do good teachers teach?; and 3) WHY is language teaching important? Teachers can use these as guidelines for their reflective writing in which they will focus on their teaching philosophies.

Another intriguing research that examined the effect language teacher's self-guides had on their teaching practices, namely how they created opportunities for the development of L2 in teacher-led discourse (TLD), was conducted by Kubanyiova (2015). The sample consisted of a single teacher who was observed over a period of eight separate lessons and was also interviewed by the author. The study yielded compelling results, for instance, the openings that L2 teachers make in TLD and the extent to which they view them as learning opportunities for their students depend on the inner resources they bring into communication. Furthermore, it was found that teachers' discursive practices are goal-oriented and as such they are not purely driven by pedagogical issues, but by a variety of components, among which we may list social pursuits and those related to one's identity, as well as teachers' future self-guides. The author further suggested that language future teacher selves are tied to teacher emotions and their values, such as the kind of environment they should be establishing for their students, the teacher roles, and the purpose of language teaching. It should be stated that language teachers negotiate more than one identity and those are determined by the teachers' earlier experiences, certain events, or they may even be shaped by the context of their profession.

2.2. Emotions

2.2.1. Defining emotions

The upcoming section will discuss emotions, particularly teacher emotions. Given the nature of emotions, scientists and scholars have proposed diverse interpretations of what they are and what they consist of. A variety of such interpretations will be presented, as well as a discussion of the differentiation between emotions and other related components, such as moods which tend to be considered as synonymous. This segment will also focus on causes of emotions, the effects they have in the classroom, and it will present research related to emotions in the second language learning and teaching context.

Defining emotions. Emotions are regarded as multi-componential or multi-dimensional constructs involving affective, physiological, cognitive, expressive, and motivational dimensions (Hall & Goetz, 2013). The *affective component* lies at the core of emotions and one can state that there can be no emotion without the affective experience. The *physiological component* refers to the bodily processes that are initiated when we experience an emotion. To illustrate, when a person experiences fear, they exhibit muscle contraction, pupil dilation, pulse increase, and other manifestations. The *cognitive component* represents the thought process tied to the emotions experienced. One example from the educational context would be the situation where a student experienced fear during the test. The emotion arose due to an image in their mind that portrayed them as unable to solve the task and turning the exam in later as a result. In terms of the *expressive component*, this indicates the visible signs, such as facial expressions, body movements or postures that a person experiencing the emotion expresses. If we take boredom as an example, we may notice that a bored person may begin to draw something or yawn. Lastly, the *motivational component* represents how an emotion can trigger certain behavior. For example, if a teacher experiences joy, a positive emotion, in class, they will leave the classroom feeling exhilarated and will be motivated to repeat the same experience.

A similar conceptualization of emotion is tied to Scherer's (2005) study who highlighted five distinct components of an emotional episode: 1) a cognitive component (appraisal); 2) a neurophysiological component (bodily symptoms); 3) a motivational component (action tendencies); 4) a motor expression component (facial and vocal expression); and 5) a subjective feeling component (emotional experience). Sutton and

Harper's (2009) definition seems to be in line with Scherer's (2005) and Hall and Goetz's (2013) in the sense that it holds that emotions stem from behavioral, experiential, and physiological systems. The theory proposed by Schutz and Davis differs from that set forth by Schuman and Scherer (2014) and Hall and Goetz (2013). Namely, Schutz and Davis state that emotions arise following cognitive appraisals of a goal-directed negotiation between a person and the environment. To elaborate, the appraisal indicates a process where an individual will compare their previously set goals with their current progress on a path to attaining them. Lazarus (1991) also stresses appraisal when defining emotions; furthermore, the author argues that people gauge if the situation is relevant to them and their well-being, as well as if it coincides with the goals that they have set out for themselves.

The definition proposed by Nyklíček, Vingerhoets, and Zeelenberg (2011) also focuses on the process of setting and reaching goals. Emotions, according to the authors, are deemed to be an ordinary human function with an adaptive value that facilitates our efficiency in the process of following our goals. Emotions have also been acknowledged at two different levels: inter- and intra-personal one. To clarify, when discussing the inter-personal level, it is said that our emotions provide other people with information related to the goals and conditions that support our behavior (Frijda, 1986). At the intra-personal level, emotions indicate what is important to us and they indicate values which play a crucial role in the process of making rational decisions (Bechara, Damasio, & Damasio, 2000).

Emotions in the context of learning and teaching. This sub-section will discuss emotions within the context of learning and teaching. It will illustrate how different scholars, such as Schutz and Laneheart (2002), Greenleaf (2002), Schutz and Zembylas (2009), and others have attempted to define emotions and connect them to the educational context. Research on teacher emotions will also be discussed as they are directly tied to the present study. Researchers such as Lee et al. (2016), Schutz and Lee (2014), Sutton, Camino and Knight (2009) will be cited and their work explained in the context of learning and teaching.

There is no doubt that emotions are an integral part of the learning and teaching process (Schutz & Laneheart, 2002). Emotions have a powerful impact on the learning process given their ability to foster or hinder it (Greenleaf, 2002). As stated by Denzin (1984), learning and teaching are considered emotional practices which generate emotions within us and other people in our environment. The author argues that even though learning and teaching may not be purely emotional practices, they have always been closely associated with emotions. The complex emotional inner workings of teaching can seem daunting at

times, especially for novice teachers who find themselves ill-equipped to cope with everyday challenges, which may, unfortunately, lead to teacher attrition (Schutz & Zembylas, 2009).

The notion of appraisal was discussed earlier in relation to emotions, but it is also important to consider it in the classroom context. Emotions are related to appraisals of what is going on during a classroom event (Pekrun, Frenzel, Goetz & Perry, 2007). More to the point, a teacher appraises how an activity is progressing and relates their appraisal to the goals they have set out for that same activity. The teacher's assessment of classroom events is partly linked to their motivation (Schumann, 2001). Emotions can have a strong effect not only on one's cognition, but also on motivational processes (Linnenbrink & Pintrich, 2000). Let us consider the role of positive and negative emotions in the realm of learning and teaching.

Teachers are faced with numerous situations that evoke different emotions within the classroom setting. The more the teacher evaluates an interaction or an incident as relevant, the stronger the emotional episode will be (Chang, 2009). For instance, a teacher's goal may be to instruct their students in academic writing; however, a student's troublesome behavior may interfere with the teacher's goals for that class which will lead the teacher to appraise this situation as emotionally relevant. When considering positive emotions, teachers most commonly experience enjoyment, pride, joy, excitement, and warmth. In terms of negative emotions, teachers often report anger, anxiety and frustration (Lee, Pekrun, Taxer, Schutz, Vogl & Xie, 2016; Jiang, Vauras, Volet & Wang, 2016, Burić, Slišković & Macuka, 2018).

The emotions experienced in the classroom have a varying effect on students' and teachers' performance, as well as on their cognitive abilities. To illustrate, in accordance with appraisal-theoretical framework for teachers (Frenzel, 2014; Jacob, Frenzel & Stevens, 2017) a person's cognitive estimation of a given event evokes various emotions. Teachers, for instance, evaluate whether their learners' behavior corresponds to their goals. This goal conduciveness is relevant since the teachers' experience of pleasant emotions (e.g. pride) will depend on their students' behavior being congruent with their pre-set goals. On the other hand, if teachers judge themselves responsible for not achieving their goals, they will experience unpleasant emotions (e.g. shame). To narrow the scope a bit, an English teacher might set a goal to have their questions answered correctly by their learners. Should a learner be unable to provide an appropriate response, the teacher will perceive this as not compatible with their goals. This realization will lead to the birth of unpleasant emotions (Khajavy et al., 2018).

Differentiating between emotions and other associated constructs. This sub-section will focus on distinguishing between seemingly similar concepts that often get mistaken for one another. In other words, it will attempt to explain the difference between emotions, moods, well-being, stress, and flow. We can start by posing simple, yet ubiquitous questions that we all encounter, for example, 'How are you doing?' or 'How do you feel?' The answer we provide may also be quite simple and common, such as 'I feel good' or 'I'm angry with George.' To most people, the answers provided might point to the same emotional occurrence while in fact they imply two different things. While the first example represents a *mood*, the second depicts an *emotion*. To further clarify, emotions and moods differ in their duration and intensity. Moods tend to last longer than emotions, however, their intensity is not as strong. Emotions, on the other hand, are shorter, but much more intense. Furthermore, moods are experienced globally, while emotions are focused toward a specific object. If one is in a good mood, that state tends to be pervasive as it affects all of our experiences. If one is angry, as in the case of George, that anger is directed toward a single 'target.' In addition, moods are classified as positive, negative or neutral, whereas each emotion is quite distinct and differs from other emotions (Frenzel & Stephens, 2013, as cited in Hall & Goetz, 2013).

The concept of *well-being* is interesting given that it casts a wider net which encompasses one's whole life or specific aspects of it that are important, such as family life or a job. Emotions are considered key elements of subjective well-being which means that it may indicate the absence of negative emotions and the repetition of positive ones. Well-being is a feeling connected with a positive appraisal of one's life that also entails a sense that one's subjective and social values have been met (Diener, Suh, Lucas & Smith, 1999). From a teacher's perspective, general well-being indicates a teacher's sense of appreciation and their confidence in their ability to attain the necessary teaching goals, according to Frenzel and Stephens (2013).

A term that is frequently used and sometimes misunderstood is *stress*. The condition known as stress represents an organism's prepared state for alarm, especially in cases when a situation surpasses one's abilities. There are three main sources of stress: bodily harm, threat, and challenge (Frenzel & Stephens, 2013). Interestingly, stress is closely associated with negative emotions, as suggested by Lazarus (2006), who argued that research has repeatedly separated stress and emotions. In a state of general alertness that is typical of stress, negative emotions such as shame, grief or anger have been noted.

Another construct to be addressed is *flow*. The concept of flow is tied to Csikszentmihalyi (1975) who defined it as a holistic feeling that people have when they

engage in a certain action, meaning they are fully involved. According to the author, flow occurs when one's competence level and the challenge level of a task are in sync, or in harmony with one another. If a person is engaged with a challenging task and they feel competent enough to do it, they will experience flow. Additionally, high performance and creativity are by-products of flow. In the classroom context, both teachers and students can greatly benefit from being 'in the flow.' Students can achieve this state when they realize that their competences are aligned with the demands of the task. When it comes to teachers, though positive, the sensation of flow is sometimes difficult to attain due to a variety of factors related to the classroom (e.g. students with different needs, interests, abilities), as well as their own ability to achieve the teaching goals.

2.2.2. Causes of emotions

The aim of this section is to present and elaborate on the following theoretical approaches that pertain to the antecedents of emotions: Appraisal Theory, Weiner's Attribution Theory and Pekrun's Control-Value Theory. In addition, the influence of the social environment on achievement emotions will be addressed. Each approach will be discussed, and their respective frameworks and propositions delineated.

Appraisal Theory. In order to understand people's behavior, we must examine the antecedents of their emotions or psychological experiences. The concept of appraisal has been referenced on several occasions throughout this thesis, for instance, in the section on teacher self-efficacy, as well as the section on teacher emotions. Appraisal represents cognitive judgements regarding certain situations, activities, or oneself. According to Lazarus (1991), it can be primary (denoting if something important occurred in a person's surrounding) and secondary (representing coping options, i.e. if any type of action may stop, lessen, or produce additional harm or benefit). Hoping to gain insight into the causes of emotions, research has uncovered that a person will not have the exact emotional reaction, or the same emotional intensity, in situations that are considered similar. For example, while a student may experience anxiety during a math test, that same emotion might not be experienced when taking an English test. Furthermore, two different individuals may have quite different emotional reactions to the exact same situation. To illustrate, imagine two students having a debate and working on the same team. One student may experience rage or anger after a loss, while another may not care at all. On the other hand, there may be certain

situations that evoke similar emotions in people. For instance, most people will report experiencing anxiety when having to address a large crowd of people (e.g. giving a speech), or getting a vaccine at the doctor's office.

In order to organize appraisals in accordance with their domains, and predict which emotions will be evoked as a result of those appraisals, people may pose a number of specific questions. For example, a person may ask themselves if they find a situation pleasant or unpleasant, if the situation at hand holds importance for them, if they believe they have the ability to alter the situation, whether it was them or someone else that was responsible for the situation, and so on. The responses people provide to the said questions are related to the key dimensions underlying their appraisals. From the practical standpoint, teachers have the capacity to affect their students' appraisal of the situation, thereby influencing the emotions they experience. This is explained by the fact that emotions are evoked by a person's assessment of a given situation. The students' view of their learning environment is heavily marked by their pre-existing beliefs, as well as their view of themselves. Akin to what was discussed in the section on teacher self-efficacy, if a student sees himself as good at English, they will perceive the task at hand as doable. In addition, the students' vision of the outcome, combined with their expectations, holds great importance. To exemplify, imagine a student took a test and felt good about it. If they got a lower grade, they would be disappointed. On the other hand, if their initial reaction was worrying about failure, a lower grade might trigger a sense of relief (Frenzel and Stephens, 2013).

Weiner's Attribution Theory. Weiner (1986) has investigated success and failure attributions and their emotional repercussions. According to the author, appraisals and attributions bear a striking resemblance in this context as they are considered judgements about the perceived causes of achievement results. Weiner delineates two major conclusions based on his research of attributions that people use to justify their achievement outcomes: success and failure evoke instant emotional reactions, and secondly, individuals will experience diverse and concrete emotions once they start linking causes with achievement outcomes. In the case of the former conclusion, the author mentions outcome-dependent emotions; for example, people experience happiness following success and sadness following failure. When it comes to the latter conclusion, Weiner states that these emotions are called attribution-dependent emotions.

There are three distinct aspects of how people evaluate the perceived causes of achievement outcomes: 1) controllability; 2) locus; and 3) stability. According to Weiner's (1985, 1986) theory, controllability indicates that the cause can be deemed controllable or uncontrollable. When it comes to locus, Weiner states that the cause can be internal or external, meaning that it can originate within or outside of the person. An example of control and locus can involve math aptitude which might be internal and uncontrollable. Furthermore, in terms of stability, the cause may be stable or unstable, indicating that it may be constant over time or variable. It is worth noting that Weiner's theory also holds that a person does not solely look for the causes of their own success or failure but the causes of other people's achievement as well. According to Weiner, attributions we make for other people's performances can cause our own emotional experiences. To elaborate, imagine you have a learner that did not pass the test and you attributed that failure to an internal cause (to the learner) and uncontrollable (by the student). This scenario is likely to evoke a feeling of pity and sympathy (as cited in Hall & Goetz, 2013). Conversely, if the same student fails to pass the test and he/she ascribes their failure to controllable and inner causes, such as lack of effort, the emotional response will be different as you will most likely be feeling anger or contempt. The student in question could have invested more effort to prevent failure from occurring in the first place. With regards to the success of others, the observer can feel different emotions depending on the appraisal of the causes. To elaborate, if we are looking at someone and we find the causes of their success to be stable and internal, we might feel contentment. On the other hand, if the success is viewed as unexpected by the observed person, the observer might experience surprise.

Pekrun's Control-Value Theory. Pekrun's (2000, 2006) Control-Value theory places focus on achievement emotions. The theory is rooted in appraisal theory and suggest that achievement emotions occur in relation to how one interprets achievement actions and their outcomes. Unlike Weiner (1985, 1986), Pekrun (2000, 2006) not only considers the causes of previous performances, but also observes appraisals from a general standpoint. In addition, he factors in both the current and prospective emotions. The Control-Value theory highlights two types of appraisals that are relevant for achievement emotions: 1) a person's subjective *control* over learning, including performance-related activities and outcomes; and 2) the *value* attributed to these activities and outcomes (Pekrun, 2000, 2006).

To clarify the abovementioned types of appraisals, the concept of subjective control implies one's assessment of control that one has over a given situation and its aftermath. In

other words, it describes the extent to which an individual believes to be in control of a situation (Pekrun, 2000, 2006). It is important to note that control appraisals are comprised of future expectations and present perceptions. Future expectations can be illustrated by showing the relationship between causes and their effects in the future as in the following example: “If I put in some real effort then I will do well on my upcoming physics exam” (indicating high expectations of control). On the other hand, an example of current perceptions could be discerned in a situation where a student is taking a test and starts thinking: “Great! This is exactly what I studied!” (indicating high control) or “I don’t understand what the teacher means – I can’t answer this question.” (showing low control) (Frenzel and Stephens (2013), as cited in Hall & Goetz, 2013, p. 20).

Value appraisals can be described as a person’s perception of whether some activity or outcome is considered positive or negative (Pekrun, 2000, 2006). Also, value appraisals denote the degree of importance/personal meaningfulness an individual places on an activity or an outcome. Extrinsic and intrinsic values can be positive and negative. To elaborate, if the process of learning is considered interesting and pleasant, it has positive intrinsic value. On the other hand, if learning is seen as uninteresting, then it has negative intrinsic value (Pekrun & Linnenbrink-Garcia, 2014). Moreover, it is important to note that although failure is often considered negative, there are differences in its severity. The example above shows that students place more importance on failing the final exam than on getting a dissatisfactory grade in a non-core course (Frenzel & Stephens, 2013).

2.2.3. Effects of Emotions

This sub-chapter will briefly delineate the effects that positive and negative emotions have on our cognitive processes, motivation to learn, self-regulation of learning, and the utilization of learning strategies. All these components will be related to both students’ and teachers’ distinct emotional experiences and exemplified according to Pekrun’s (2006) theoretical framework and various studies. Positive emotions will be covered first, followed by negative ones.

According to Pekrun (2006), when we refer to positive emotions, we indicate the emotions that have a pleasant effect on us, for instance, enjoyment or pride. Positive task-related emotions have been known to improve one’s focus on the learning activity (e.g. feeling the enjoyment of learning). In addition, positive emotions, such as pride, foster the students’ use of the learning strategies, such as elaboration. They also allow the students to

use them flexibly and effectively. When it comes to self-regulation, positive emotions facilitate one's autonomy and the process of self-regulation when learning (Goetz, 2004). The impact of positive emotions can also be observed through the prism of motivation. When one experiences positive emotions, learners' intrinsic motivation is increased, and is immediately reflected on the effort they invest into attaining their achievement goal. What is more, positive emotions fuel one's determination and persistence when faced with obstacles or challenges (Pekrun, 2006).

On the other hand, negative or unpleasant emotions have a detrimental effect on our cognitive performance, motivation, and self-regulation. They often tax our resources and reduce the quality of our performance. Negative emotions consume our cognitive reserve. Intense emotions tend to move our attention away from the task at hand and hamper our performance (Zeidner, 1998). According to Frenzel and Stephens (2013) negative task-related emotions have a distracting effect on a person. For example, learners may start having task-irrelevant thoughts, such as "Hm, I don't understand really understand this, what a stupid task…" (as cited in Hall & Goetz, 2013, p. 30). Regarding learning strategies, negative emotions such as anger or anxiety are often linked with the use of rigid and ineffective strategies, such as rote learning and rehearsal. The process of self-regulation is also affected by negative emotions. Unlike positive emotions, which promote the students' autonomy, negative emotions are associated with students who have a predilection for receiving external rules (Goetz, 2004). Both their performance and motivation are deterred by experiencing negative emotions. For example, boredom or hopelessness, reduce the level of both extrinsic and intrinsic motivation.

Teacher emotions affect their instructional behavior, which in turn influences students' behaviors and goals (Frenzel, Götz, Stephens, & Jacob, 2009). Day and Quing (2009) claimed that teachers' emotional lives involve situations in schools and classrooms; furthermore, different emotions may have short or long-lasting repercussions for their behavior and self-concept (how they feel about themselves and other people) (as cited in Schutz & Zembylas, 2009). Positive emotions positively affect thought-action repertoires, meaning that teachers, as well as students, will demonstrate the use of various strategies and produce more ideas (Fredrickson, 2001). Similar to the findings pertaining to students, reappearing pleasant emotions are tied to creative and flexible teaching strategies which result in the increase in student motivation (Frenzel, Goetz, Stephens, & Jacob, 2009). Experiencing negative, intense or repetitive emotions, on the other hand, reduces teachers' well-being, causes burnout, emotional exhaustion, and can lead to them abandoning the

teaching profession (Chang, 2009). Negative emotions can also impair the working memory in the process of executing certain mental tasks (Linnenbrink & Pintrich, 2000). Teachers' use of teaching strategies is also impacted by negative emotions as they inhibit their flexibility and creativity, as well as decrease students' motivation. In addition, teachers who experience negative emotions such as anxiety may often find it difficult to deviate from their prepared lesson plans and they may also be inclined to use rigid teaching strategies and repetitive exercises (Frenzel et al., 2009). Anger and frustration, as frequently reported negative emotions among teachers, diminish their intrinsic motivation and enhance the students' negative emotional episodes (Sutton & Wheatley, 2003). Students' learning achievement and teachers' sense of well-being will be seriously jeopardized if the teachers continue to amass negative emotions. Highly enthusiastic teachers are less likely to experience burnout which usually corresponds to increased negative emotions (Kunter, Frenzel, Nagy, Baumert, & Pekrun, 2011; Carson, 2006).

2.2.4. Emotions in the classroom

This sub-heading will be two-fold: the first section will primarily concentrate on emotions that teachers experience in the classroom, while the second will examine teacher emotions in the second language context. Teachers' achievement emotions, more accurately their causes, will be discussed and primarily tied to Frenzel and colleagues' (Frenzel, Goetz, Stephens, Jacob, 2009) model of reciprocal causation between teacher emotions, teaching behaviors, and student outcomes. The starting point will entail focusing on different types of teachers' cognitive appraisals, their precursors, and finally elaborating on how teacher emotions, when evoked, affect their instructional behavior. As regards to teachers' emotions in the L2 context, several studies (e.g. Horwitz, 1996; Bress, 2006; Mousavi, 2007) will be presented with the aim of showing how positive and negative emotions affect the process of second language learning and teaching.

Teacher emotions. Both teacher and student emotions arise as a result of one's assessment of a given situation. Given that the goal is to address teacher emotions, it is important to understand what types of cognitive appraisals (judgements of situations in the classroom) teachers make and how they influence the formation of their goals, as well as their perception of their students' behavior. First, let us focus on the three main themes that shape the aforementioned processes: 1) achievement behavior; 2) motivational engagement; and 3)

social-emotional behavior (Frenzel, Goetz, Pekrun, 2008; Frenzel et al., 2009). To briefly illustrate, a teacher may come into the classroom with several goals, for instance, having their students provide correct answers to their questions (indicating good achievement behavior), maintaining or creating interest in a given topic and having them partake in the class actively (indicating motivational engagement), and following the pre-set classroom rules (indicating appropriate social-emotional conduct). Teachers make their judgements in accordance with their perceptions of their students' behavior and their goals. The upcoming sections will provide more insight into specific elements of Frenzel and colleagues' (Frenzel et al., 2009) model (see Figure 1).

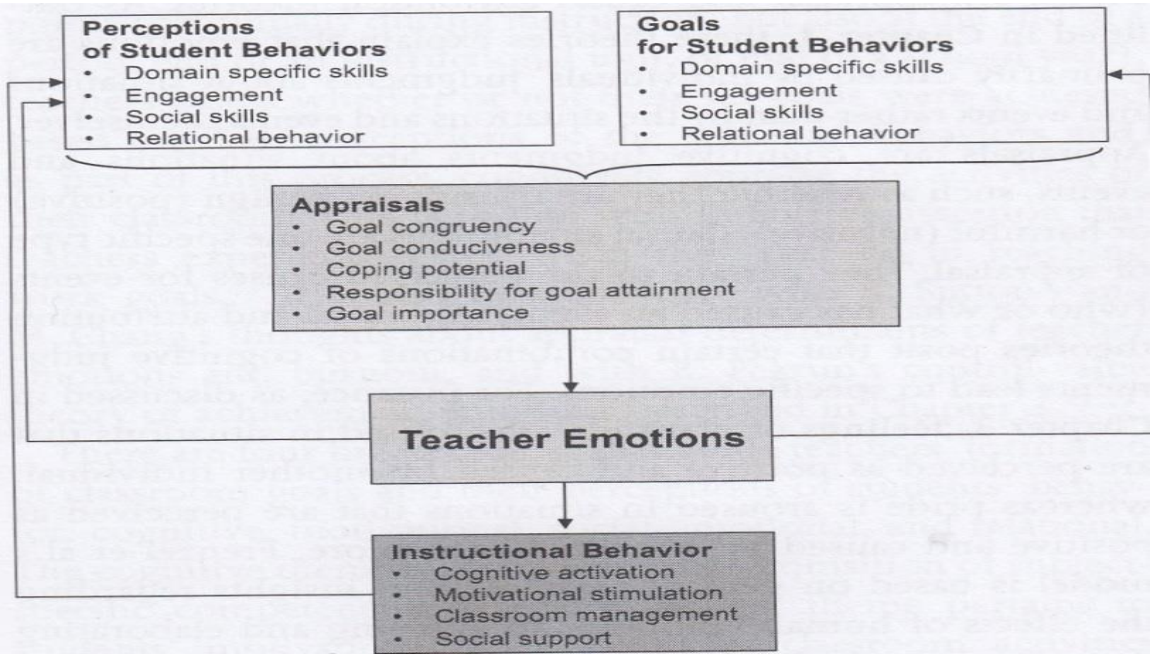

Figure 1. Model representing the causes and consequences of teachers' emotions (Frenzel & Stephens, 2013, as cited in Hall & Goetz, 2013, p. 50)

Teacher appraisals of classroom events hold great importance for their emotional experiences. If we focus on the uppermost part of the diagram, we will note the elements that help form teachers' appraisals. The lowermost section, on the other hand, represents the influence teachers' emotions have on their instructional behavior. What emotions teachers experience depends on their assessment of their students' behavior, as well as the alignment of their behavior with the teachers' goals. Teachers gauge whether their goals were successfully achieved in relation to their initial perceptions of student behavior; furthermore, teachers make these appraisals at various points, for instance, during their instruction, after a

unit, at the end of the school years, and so on. It is important to note that alongside their perceptions of student behavior, teachers also assess classroom activities.

Frenzel's model suggests four general themes that may be listed with regards to teachers' formation of classroom goals and their perceptions of student behavior: cognitive (acquiring subject-related competencies), motivational (students' motivational participation in activities), social-emotional (students' ability to function within a group and respect others), and relational (forming good student-teacher rapport). There are also five types of appraisals that are quite relevant for teachers' emotions: goal congruency (indicates if the teachers judge their students' behavior in line with their goals); goal conduciveness (shows if the students' behavior is seen as adding to attaining a classroom goal); coping potential (judgements that show if the teachers feel efficient enough to achieve and optimize their goals); responsibility for goal attainment (denotes who is responsible for the goal accomplishment); and goal importance (indicates how relevant it is for the teacher to achieve a certain goal or to avoid it non-attainment). In addition, it is not necessary to process every single appraisal for an emotion to occur.

In terms of instructional behavior, positive emotions promote teachers' use of teaching strategies (Frenzel et al., 2009). This would indicate teachers being less traditional in class, and more creative. Teachers' emotions are quite visible to the students who often get affected by them. This is referred to as 'emotional contagion' as students not only perceive how their teachers are feeling, but they also adopt similar emotional experiences. Moreover, a teacher's style of teaching, if influenced by enjoyment or enthusiasm, will promote students' learning and motivation (Frenzel et al., 2009). Conversely, repeated negative emotions will cause unwanted behavior among the students and decrease their motivation. Teachers' self-efficacy beliefs can instigate positive emotions, while anxiety and lack of familiarity with the subject matter can cause negative emotions, in particular anxiety, which can lead to poor classroom management.

Learner and Teacher Emotions in the Second Language Context. This section will examine a variety of research aimed at investigating emotions among second language learners and teachers. The first part will briefly address the notion of affect and mention some respective scholars that have conducted studies on the topic, while the second part will discuss positive and negative emotions in the L2 context and relate it to pertinent research. While the focus will be placed on teacher-related research, some studies carried out among L2 students will be mentioned.

Learner-focused Research

The role of cognition was quite prominent throughout the history of SLA and this approach obscured the scholars' view of the relationship between cognition and emotions in the process of language learning and teaching (Swain, 2013). A gradual change from cognitive to affective approach made many researchers start viewing beliefs and motivation through the prism of emotions. According to Scovel (1978, p.129), affective factors have frequently been interpreted as "the converse of cognitive variables." In other words, affective variables constitute everything that affects language learning that is not tied to cognition. As regards to early research on affect and emotions, authors such as Scovel (1978) and Lozanov (1979) were among the first to highlight the relevance of affect in the process of acquiring a second language. Krashen's (1982) *affective filter* also emphasized the importance of learner emotions when acquiring an L2. The author claimed that every student has an affective filter and when it is raised, his or her interaction with and processing of the content will be impaired. It is the teacher's role to alleviate their students' sense of anxiety by providing a stress-free working environment.

The role of affect was also tied to research focusing on language learning strategies, for instance, affective strategies are a part of many taxonomies (O'Malley & Chamot, 1990; Oxford, 1990). The affective component can be noted in the model of language ability proposed by Bachman and Palmer (1996). Namely, affective schemata are tied to affective and volitional attributes and by expanding the model and embracing nonlinguistic components, such as emotional states and personality, a significant step forward was made. In addition to being part of language learning strategy use research, L2 research on emotions were applied in various other contexts. To briefly illustrate, Maynard (2002) and Imai (2010) claimed that emotions are not internal to an individual and that they occur through interaction. Zembylas (2007) viewed emotions through the interactive and performative approach which combined both social and psychological factors. While Dewaele (2008) provided a contrast between a neuropsychological and constructivist approach, White and Pham (2017) studied them from a dialogical perspective which portrays emotions as an integral part of awareness, knowledge and the potential of/for action.

When it comes to student-related research on emotions, many scholars conducted research on the topic. Among them were Horwitz, Horwitz and Cope (1986) MacIntyre and Gardner, (1991), Gardner and MacIntyre (1993), Mihaljević Djigunović (2002, 2004), Garrett and Young (2009), Imai (2010), Aragão (2011), MacIntyre and Legatto (2011), Rahimi & Bigdeli (2014), Ross (2015), Pishghadam et al. (2016), to name a few. To briefly exemplify

some of them, MacIntyre and Gardner (1991), Gardner and MacIntyre (1993) classified foreign language anxiety as situation specific. Language learners experience anxiety when they do not feel prepared to use the second language due to a lack of proficiency. Mihaljević Djigunović and colleagues (2004) contributed to the research on foreign language anxiety by designing a culturally-specific instrument for measuring language anxiety (named CROEFLA). It is suited to be used in the Croatian educational context. The author's earlier research among Croatian EFL learners showed speaking in front of other people to be a major source of learner anxiety. According to her findings, more than half of the learners in the study admitted feeling anxious when asked to speak (Mihaljević Djigunović, 2002). Garrett and Young's (2009) research investigated a student's affective responses to learning Portuguese. The student's study journal revealed a plethora of interesting data related to language awareness, teacher voice, social relations, and learning of culture. Another intriguing example involved Imai's (2010) study which observed how a group of ESL students created and shared their emotional attitudes while engaged in collaborative learning, and how emotional inter-subjectivity impacted that group's work. Another example involved the study on EFL students' in-class emotions carried out by Pishghadam and colleagues (2016). The students were interviewed with the aim of obtaining data necessary to construct the EFL Skills Emotions Questionnaire.

Teacher-focused Research

With regards to L2 teacher research on emotions, its beginnings can be traced to studies on teacher anxiety. A study carried out by Horwitz (1996) showed anxiety to be detrimental to the quality of foreign language instruction, especially among non-native language teachers whose self-efficacy was reduced due to their apprehension about their target language proficiency. Besides underscoring the negative effects of anxiety, the author suggested several guidelines that should help foreign language teachers alleviate the emotion and become better instructors. Teacher stress was also of great interest to many scholars, such as Bress (2006) and Mousavi (2007) who investigated it in the context of teaching a second language. Though not technically an emotion, stress is an emotion-related state that affects many teachers and students. Mousavi (2007), for instance, set out to investigate the causes of stress among ESL/EFL teachers, as well as the differences between non-native and native teachers. The study yielded interesting findings that pertain to some similarities and differences between the groups tested. For instance, both native and non-native teachers agreed that it is stressful to teach demotivated students moreover, the majority of the non-

native teachers stated that they felt anxious due to their lacking knowledge in L2 grammar or vocabulary. Another interesting difference has to do with classroom observation. While over half of native teachers found observation stressful, half of non-native teachers disagreed with that statement. Generally, non-native teachers experienced issues because they were not native speakers. In addition, beginner teachers admitted to worrying the most due to their lack of experience

Research was also conducted on foreign language teacher emotions in relation to their students, colleagues, institutions. Ruohotie-Lyhty, Korppi, Moate, and Nyman (2018), Cowie (2003, 2011), Xu (2013) and Timmer, Aguilar Río, and Schneider (2015) investigated teachers' positive and negative emotions with regards to their students, among other things. Ruohotie-Lyhty and colleagues (2018), for instance, carried out a longitudinal study among Finnish FL teachers with the aim of investigating the professional development of new teachers. More precisely, this research provided insight into the emotional experiences of seven FL teachers and their relation to their students within the first ten years on the job. The results indicated the presence of intrapersonal dialogues and changing teacher emotions. The teachers reported experiencing negative emotions at the beginning of their teaching career and the adverse effect these emotions had on their well-being. It was noted that negative emotions should be addressed by teacher training programs, as well as teacher development courses because novice teachers are among those who suffer most when they experience unpleasant emotions. If training programs were to address emotions in their curriculums, young teachers would be better equipped to deal with them. Teachers in the study reported positive emotions during relaxed communication with their students. Such interactions were described as affectionate and warm. The results also pointed to the fact that the teachers' negative emotions decreased with time, while their positive emotions increased. This was explained by the fact that novice teachers obtained some experience and managed to put things into perspective.

Cowie (2003) interviewed nine experienced EFL teachers employed in Japanese universities. The teachers involved reported on emotions experienced during teaching. They reported experiencing both positive and negative emotions whereby positive emotions were related to their students, while negative emotions were associated with their colleagues. Akin to the findings reported by Ruohotie-Lyhty and colleagues (2018), Cowie found that the teachers exhibited warmth and positive emotions toward their students. In addition, they often served as moral mentors to them. Conversely, less pleasant emotions, such as anger and

frustration, were instigated by their relationship with their colleagues. The root of this problem can be traced to the divergence between their belief systems and values and that of their colleagues. The notion of emotional labor was also introduced as being relevant to the teaching profession. Teachers need to be made aware of the emotions that are acceptable in their line of work and which are not, for instance, demonstrating anger toward colleagues.

Cowie's (2011) subsequent research also aimed at investigating experienced EFL teachers' emotions toward their students, colleagues and work. The author interviewed FL teachers that work at Tokyo universities and asked how they perceive emotions pertaining to their students, their colleagues and their profession. Corresponding to the author's study above, positive emotions, warmth and attentiveness were directed toward the students in this study as well. Furthermore, negative emotional experiences were tied to their relations with their institutions and colleagues. The implication of the study was that teachers need to be able to converse about the emotional impact of teaching, as well as be aware of the moral goal of teaching.

Xu (2013) carried out a study among three novice middle school language teachers in China. Her study utilized a narrative inquiry; furthermore, the author used two rounds of interviews and teacher self-reflective journals to investigate the teachers' positive and negative emotions. The results of the study revealed that the teachers exhibited mixed feelings when it came to their students, colleagues and administrators. To illustrate, the teachers in the study tied their happiness and satisfaction to the students' success. Furthermore, negative emotions, such as anger, were triggered by the students' lack of obedience (in Chinese culture students are required to obey their teachers) or work discipline (not doing the assigned homework). Another interesting example is the unequal power relationship between teachers and students. Teachers were in place of authority and as such had power over students both inside and outside the classroom; moreover, if students should fail, that would reflect negatively on the teachers which would, in turn, instigate negative emotions. The study also reflected on teachers' emotions regarding their colleagues and parents.

More recent studies conducted by Timmer et al. (2015), Heydarnejad et al. (2017), Toraby and Madaressi (2018) and Khajavy et al. (2018) focused on foreign language teacher emotions and other elements, such as language teacher education programs, teaching styles, and students' perspectives on teachers' success in teaching. To briefly elaborate, Timmer et al. (2015) set out to investigate the relationship between emotions, learning, and teaching, as

well as emotional reflexivity in a language teacher training program for teachers from France and Germany. They were part of the project that involved pre-service language teachers. The authors stressed that the reflexivity of pre-service teachers may help them become more aware of their emotions and the effect they have on the teaching process. Heydarnejad and colleagues (2017), on the other hand, wanted to research the teaching styles and emotions foreign language teachers experience in class. The study involved 200 teachers from public and private schools in Iran. The results pointed to a variety of emotions experienced. For example, positive emotions, such as pride and enjoyment, were found to be dominant in comparison with negative emotions like anxiety or boredom. When it comes to negative emotions, the findings indicated that shame and anxiety were the most prominent unpleasant emotions among the teachers. In addition, the authors concluded that emotions have a strong effect on the choice of teaching styles.

Torabi and Madaressi's (2018) study encompassed both EFL students and teachers, including a total of 100 respondents, 20 of whom were EFL teachers. It focused on the association between teacher emotions and the students' view of their teachers' success in teaching. The results showed a moderate positive correlation between teachers' emotions and the students' perspectives on their teaching success. Moreover, positive emotions, such as enjoyment and pride, positively affected the students' motivation. In another study, Khajavy and colleagues' (2018) investigated the precursors of pleasant and unpleasant emotions among Iranian EFL teachers. A total of 11 teachers partook in the study and the findings revealed that teachers experienced a variety of emotions. To illustrate, the teachers reported feeling both positive (e.g. pride, enjoyment) and negative emotions (e.g. shame, anger) and tied them to different causes. Pride was instigated by the students' success or their positive feedback. Furthermore, positive interaction with the students and observable progress were the causes of the teachers' enjoyment. On the other hand, the teachers often experienced shame and anxiety if they were unable to provide answers to students' questions. In addition, shame occurred as a by-product of student failure. Teachers also recalled feeling angry with their students for different reasons, for instance, the students' lack of activity or their failure to follow classroom rules (behavioral issues).

2.3. Emotion Regulation

The scope of this sub-section entails the concept of emotion regulation and the empirical research pertaining to that subject. To elaborate, this chapter will attempt to define self-regulation before proceeding on to affect regulation, which is a superordinate term to emotion regulation. Different models of emotion regulation will be presented and discussed, such as Gross's Process Model of Emotion Regulation and Koole's Emotion Regulation Classification System. Emotion regulation will also be portrayed through the lens of the second language classroom where varied studies will be outlined and tied to the learning and teaching process.

2.3.1. Defining self/affect-regulation

Defining self-regulation. The notion of self-regulation can be viewed as a process of setting goals, making plans, choosing appropriate strategies that will help one attain the goals, as well as self-assessment of the progress of achieving these goals. The agentic role is quite important when discussing self-regulation given that a person exerts their power to control their actions, goals, and destiny. Zimmerman (2000, p. 14) defines self-regulation as "self-generated thoughts, feelings, and actions that are planned and cyclically adapted to the attainment of personal goals." Self-regulated learning is a closely related concept and it is comprised of three distinct elements: *learning*, *regulation*, and *self*. Learning pertains to a variety of activities that an individual is involved in while acquiring new knowledge or skills. Regulation indicates a state in which a person compares their current condition with their target condition (learning goals). The person in question is then motivated by the perception of the discrepancy between the two states and is driven to reduce it (Wiener, 1948). If we were to define self-regulated learning, we would call it a type of process in which one acquires knowledge and skills; moreover, it is a process in which the students are self-motivated and independent. This would mean that they set their own goals, and choose adequate strategies that will ensure the accomplishment of the said goals (Hall & Goetz, 2013).

If a person wishes to attain successful self-regulated learning, according to Goetz, Nett and Hall (2013), they cannot do it without possessing the following competencies: 1) ability to independently establish appropriate learning goals; 2) diagnostic skills in order to accurately determine the discrepancy between one's current state of learning and one's target

learning goals while in the process of achievement striving; 3) knowledge and skills aimed at reducing the difference between one's current learning state and the target state; and 4) motivation to initiate and maintain optimal learning (as cited in Hall & Goetz, 2013, p. 126). The self-regulation process is thus regarded as dynamic and cyclical which means that the abovementioned competencies need to be established and used. Self-regulation, as well as self-regulated learning, can be studied not only among students, but also teachers.

Teacher self-regulation can also be considered a dynamic process in which the teachers direct and maintain their motivation, cognition, and use strategies to ensure efficacious teaching (Yesim, Sungur, & Uzuntiryaki, 2009). Goetz and Hall (2013), drawing from other sources, listed several reasons why teacher self-regulation should be studied further; in addition, they provide suggestions for encouraging self-regulated learning and instruction among teachers. Self-regulated learning in teachers should be studied so that the teachers could adequately instruct the students on the same process. Furthermore, teachers with highly developed self-regulation skills will be able to discern self-regulation issues among their students. Also, developing teachers' self-regulation skills is encouraged as part of lifelong learning in an ever-changing modern society. Lastly, denoting an aspect that is especially relevant, teachers' self-regulation competencies should be perfected so they could promote their physical and psychological well-being. This is especially relevant in light of teachers' experiences with stress and unpleasant emotions in their line of work.

Goetz and Hall (2013) provided a list of possible options that teachers could utilize to facilitate self-regulated learning and teaching in various contexts, such as in pre-service teacher education, in-service teacher programs, individual continuing education and so on. To briefly illustrate, one idea for the education of pre-service teachers would be to introduce self-regulated learning instruction to their program. As regards to in-service teachers, they might benefit from the support of group-oriented training exercises aimed at improving their self-regulatory skills. Teachers could also opt for education courses that deal with the development of self-regulatory skills or engage in online self-instruction. Paris and Winograd (2003) proposed several avenues that teachers could take to perfect their self-regulatory strategies. For example, teachers can improve the quality of their instruction by engaging in self-evaluation. They can also self-regulate their thoughts, effort, and emotions. In other words, they can carefully choose their goals, anticipate the repercussions of the said goals, prioritize between activities (decide which take precedence and which are less relevant), and they can analyze their emotional experiences in hopes of finding an adequate solution to their

problem. The upcoming section will address affect/emotion regulation in the academic context, while paying special attention to teachers.

Defining affect/emotion regulation. Considering the hierarchy of elements associated with emotions, the notion of affect is a superordinate term to that of emotion regulation. This claim was supported by Gross (2015); however, there are others that feel differently. Buck (1993), for example, views affect as the experiential component of emotion, while the APA (2013) see it as a behavioral component of emotion. On the other hand, affect has often been equated with emotion for example, Huitt and Cain (2005, p. 1) state that affect "refers to the emotional interpretation of perceptions, information or knowledge…and asks the question: How do I feel about this knowledge or information?" In addition, it has been associated with a variety of components, such as motivation, self-efficacy, beliefs, personality traits, and others (Bernat & Gvozdenko, 2005). Considering that self-regulation involves regulation of the self and by the self, Bown and White (2010) stated that affect regulation involves the psychological self to deal with self-doubt, to overcome various types of anxiety or to instigate positive emotions that would aid with the learning process. Another interesting perspective on affect regulation comes from Goetz and colleagues (2005) who have put forth the concept of 'intelligent processing'. To be more precise, such processing in learning and achievement denotes the use of one's cognitive capacity to note emotions, reflect on them, and regulate them.

Emotion regulation has been studied and discussed by many scholars, including Thompson (1994), Cole, Michel and Teti (1994), Gross (2002), Koole (2009), and Schutz, Quijada, de Vries, and Lynde (2011). Thompson (1994) views emotion regulation as intrinsic and extrinsic processes that help us learn how to perceive, monitor, assess, and alter our emotional reactions. Cole and colleagues (1994), on the other hand, have come up with a rather intriguing and complex take on emotion regulation They consider emotion regulation as "the ability to respond to the ongoing demands of experience with the range of emotions in a manner that is socially tolerable and sufficiently flexible to permit spontaneous reaction as well as the ability to delay spontaneous reactions as needed" (Cole et al., 1994, p. 74). Gross's (2002) interpretation might be among the most prominent ones and it claims that emotion regulation indicates the processes which help individuals shape which emotions they have, when they experience them, and how they express them. Koole's (2009) definition of emotion regulation pointed to the processes which people use to change the direction of their emotions. Koole maintains that emotion regulation is an avoidance strategy and claims that it

indicates how fast an individual can leave a certain emotional state. When it comes to the interpretation proposed by Schutz and colleagues (2011), it very much resembles the one of Thompson (1994) as it highlights different processes aimed at monitoring, assessing, and changing emotional experiences. In order to get a better understanding of the intricacies of emotion regulation, the upcoming section will present different models and explain various types of regulation strategies.

2.3.2. Models of Emotion Regulation

This section will introduce four distinct models of emotion regulation: The Hot/Cool System (Metcalfe & Mischel, 1999; Mischel & Ayduk, 2004), The Resource or Strength Model (Baumeister, Bratslavsky, Muraven & Tice, 1998; Schmeichel & Baumeister, 2004), The Process Model of Emotion Regulation (Gross, 1998), and Koole's Classification System of Emotion Regulation (Koole, 2009). To illustrate, Mischel and colleagues' (1999, 2004) Hot/Cool System places willpower at its core. They use two individual systems (a hot and cool one) to illustrate the nature of emotion regulation. The cool or the 'know' system involves contemplation, cognition, ease, emotional neutrality; moreover, the authors mention information 'cool nodes' that are linked to one another and that facilitate strategic and rational behavior. When a person is faced with disruptive emotional experiences, this system allows them to maintain their composure. The hot or emotional 'go' system, on the other hand, represents the fast processing of emotions, as well as quick responses. It is interesting to note that the hot system prevails earlier in life and is negatively associated with age, while the cool system begins to develop later in life and is positively linked to age. To briefly show this system through the prism of teaching, if a teacher has the ability to regulate their emotions, they may use the cool system do reduce the impact of negative emotions by disregarding the stimulus (e.g. ignoring their students' disruptive behavior), distracting themselves (e.g. imagining a peaceful situation in an attempt to suppress their laughter), and so on. However, if the teacher is unable to regulate their emotions and the cool system fails, the hot system will take over the cognitive reasoning. This is mostly typical of highly stressful situations.

Another model is that of Baumeister and colleagues (2004) which is called the Resource or Strength Model. What is intriguing in this model is the image of a teacher as a 'battery' with a finite capacity for self-regulation. The authors claim that any form of self-regulation, including the regulation of emotions, requires a certain amount of energy or

resources. Whenever a person engages in self-regulatory behavior, a portion of that energy decreases. In addition, the more strategies the person utilizes, the less energy remains for further self-regulation. This gradual depletion of inner resources may leave a teacher 'dry' and incapable of using additional regulatory strategies. The authors have put forth several possible solutions that may aid with the question regarding the prevention of complete depletion and the restoration of energy. To exemplify, a teacher may choose to rest to recharge their energy. However, research has shown that teacher motivation plays an important role here and that highly motivated teachers can overcome this obstacle and replenish their self-regulatory resources.

One of the most notable and detailed models in the domain of emotion regulation was proposed by Gross (1998), namely the Process Model of Emotion Regulation which is based on five distinct steps in the process of generating emotions. The author calls these points "five families of emotion regulation processes" and include the following: situation selection, situation modification, attentional deployment, cognitive change, and response modulation (Gross, 2015, p. 7). The elements listed differ from one another in terms of the time of their primary impact. When looking at the model, it should be viewed as a process through time; for example, when looking at a certain situation, we start from its very selection, then modification, deployment of attention, appraisal, and finally the emotional response itself. Let us briefly focus on the regulation strategies mentioned above and provide examples. Situation selection, situation modification, attentional deployment and cognitive change belong to the antecedent-focused strategies, whereas response modulation belongs to the response-focused strategies.

Situation selection, the first step, indicates taking a series of actions designed to bring us into a situation that will (more or less) lead us to a situation in which we would expect to experience positive or negative emotions. To illustrate, we may wish to avoid an irritable neighbor or simply find a friend with whom we may have a good cry. *Situation modification* represents the effort a person makes to alter the emotional relevance of some situation. For instance, a parent may help alleviate their child's frustration by helping them deal with a math problem or they can introduce a game they may play on a rainy day. The *attentional deployment* strategy is interesting because it is among the first emotion regulation strategies to emerge in early childhood. *Attentional deployment* refers to a situation whereby a person changes the direction of their attention in a certain situation with the aim of reducing its emotional impact. To illustrate, one of the most used forms is distraction, such as evoking

memories that help us reach the desired emotional state. Distraction may come in the form of concentrating on other aspects of the situation or ignoring it altogether.

In terms of *cognitive change*, this strategy represents the act in which we attempt to change how we perceive a given situation so we could modify its emotional relevance. This can be achieved by altering one's thoughts about the current predicament or by viewing one's ability to manage the issue at hand differently. Cognitive change can refer to external situations, such as going to a job interview and viewing it as an opportunity to gain some knowledge about the company, or internal situations, such as portraying your anxiety as a positive rush that will enable you to perform better. Reappraisal is one of the most prominent forms of cognitive change; moreover, it is often used to de-regulate unpleasant emotions. However, it may also be used to increase or decrease both positive and negative emotions (Samson & Gross, 2012).

The fifth form of emotion regulation is labeled *response modulation* and it takes place later in the process of generating emotions. Once the emotional experience has been initiated, response modulation helps us modify and affect our behavior and physiological state. To elaborate, experiential and physiological effects of unpleasant emotions can be de-regulated by means of deep-breathing techniques or engaging in physical exercise. Expressive behavior falls under the scope of response modulation and it refers to deliberate attempts at modifying our expressive behavior. In other terms, a person suppresses or intentionally withholds their positive or negative emotional responses.

The final model to be presented in this section is Koole's (2009) Classification System of Emotion Regulation. The author classified emotion regulation strategies in terms of the target of the strategy and the psychological function. According to this model, the targets of emotion regulation strategies are as follows: attention, emotion-relevant knowledge, and body manifestations of emotion. Psychological functions, on the other hand, can be need-oriented, person-oriented, and goal-oriented. To exemplify, Koole considers the strategy that focuses on deep breathing as person oriented given that it involves physical manifestations. The strategy of distracting oneself, on the other hand, is viewed as an attention-targeting strategy with a psychological function involving one's need.

2.3.3. Emotion Regulation in the Classroom

The aim of this section is to provide an overview of research on emotion regulation in the classroom context. Despite the many studies on the use of various emotion regulation studies among the learners and university students (e.g. Gumora & Arsenio, 2002; Pekrun & Stephens, 2009; Burić, Sorić & Penezić, 2016), the focus will be on the emotion regulation processes of teachers. In the first part, general teacher-related studies will be presented, while the second part will concentrate on the emotion regulation practices of second/foreign language teachers.

Teacher Emotion Regulation. It is not uncommon for teachers to experience a multitude of emotions within a given working day. Their relationship with students, colleagues, superiors, and parents instigates both pleasant and unpleasant emotions which directly affect their teaching. It is necessary for every teacher to be aware of and equipped to use different regulation strategies that will, in turn, make them more efficacious in the classroom and more resilient to the adverse aspects of the teaching profession. The term emotional intelligence is commonly tied to one's ability to adequately handle and express their emotions. Bracket and colleagues (2010) hold that teachers with a high level of emotional intelligence will be able to manage their emotions effectively and often experience positive emotions, even in cases when these emotions are dysregulated (Brackett, Palomera, Mojsa-Kaja, Reyes, & Salovey, 2010). The following section will present and discuss teacher-related studies that targeted different facets of emotion regulation processes. To exemplify, researchers set out to explore teachers' awareness of emotion regulation strategies, as well as the reasoning behind their use (Sutton, 2004; Gong, Chai, Duan, Zhong, & Jiao, 2013; Miller, 2015), to identify which strategies teachers use (Burić, Penezić, & Sorić, 2017; Jiang, Vauras, Volet, & Wang, 2016), or to tie specific emotion regulation strategies with other related constructs, such as positive/negative emotions and emotional labor (Lee, Pekrun, Taxer, Schutz, & Xie, 2016).

Sutton's (2004) research was directed at investigating the reasons behind and the use of emotion regulation strategies among 30 middle-school teachers from Northeast Ohio, USA. The author used semi-structured interviews as a method of obtaining the data. The results of the study showed that majority of the teachers engaged in emotion regulation. Furthermore, they believed that emotion regulation in the classroom promoted their teaching effectiveness and that it was in accordance with the emotional image of themselves as teachers. With regards to the strategies used, the teachers admitted resorting to preventative

strategies, such as modifying the situation, and responsive strategies, for instance behavioral strategies (e.g. breathing deeply).

Gong and colleagues (2013) carried out a study that aimed at investigating Chinese teachers' goals for the use of emotion regulation strategies; in particular, the teachers were asked about the goals and strategies they used not only in class, but also before and after their lessons. A total number of 34 teachers employed in elementary, middle and high school were involved in this study. The study was qualitative in nature considering that the teachers participated in an interview. The findings reported were interesting in that they pointed to a variety of goals underscoring the use of regulation strategies. The teachers stated that their emotion regulation process involved attaining instructional goals, reducing the negative effect negative emotions have on student learning, reinforcing ethic and professional norms, safeguarding students' mental health, maintaining acceptable emotional images, and facilitating positive rapport between the teacher and the students. As regards to the use of regulation strategies, the authors used Gross's framework to classify the data obtained. The results showed that the majority of teachers resorted to two or more strategies to regulate their emotions. Though a plethora of strategies was reported, the majority of the teachers used response modulation strategies in class, followed by situation modification strategies in class (by more than half of the teachers), as well as cognitive change strategies. The teachers in the study were compared to their American counterparts, whereby it was found that Chinese teachers tend to suppress their negative emotions more than American teachers, and they tend to exhibit their positive emotions less in front of their students.

Miller's (2015) doctoral study was carried out among 233 teachers who had enrolled in the Summer Principals Academy graduate program designed to train teacher leaders at the Teacher's College at Columbia University. The research in question examined the teachers' use of suppression and cognitive reappraisal (self-reported), alongside their job satisfaction and aspects of burnout. The results revealed a negative correlation between expressive suppression and overall emotion regulation knowledge. Furthermore, a significant positive correlation was noted between expressive suppression and cognitive reappraisal.
Overall knowledge of emotion regulation was also positively, though moderately, tied to job satisfaction. The findings also showed that both the emotion regulation strategies and overall knowledge of emotion regulation did not have a significant correlation to emotional exhaustion.

As regards to teacher-related emotion regulation strategies, the study conducted by Burić and colleagues (2016) not only identified specific strategies used by teachers, but it also resulted in the development of the Teacher Emotion Regulation Scale (TERS). The authors aimed at investigating Croatian middle-school teachers and their emotion regulation practices beyond the classroom context, including work colleagues, parents, and the education system. In order to obtain the desired data, mixed methods approaches were utilized. According to the results, Croatian teachers reported experiencing a myriad of positive and negative emotions (ranging from satisfaction and pride to frustration and hopelessness), and used various strategies to regulate (predominantly) negative emotions. To illustrate, reappraisal was used often by the teachers, and it belonged to the antecedent-focused group. Strategies belonging to active context modification were second in terms of frequency of usage. Situation selection strategies were noted with regards to parents or school staff. In terms of response-modulation strategies, teachers mostly used suppression, only to be followed by behavioral modification strategies, such as deep breathing, and some forms of venting, for instance, yelling or crying.

Jiang and colleagues' (2016) study involved both students and teachers. While the students (53) revealed their perceptions of their teachers' positive and negative emotions, teachers (4) in the study reflected on their emotion regulation strategies. The authors carried out a semi-structured interview to identify emotion regulation strategies used by the teachers; moreover, Gross's process model was used as a framework to classify the strategies reported. The results of the study were categorized into five distinct categories: situation selection, situation modification, attention deployment, cognitive change and suppression.

The teachers primarily resorted to down-regulation of negative emotions rather than up-regulation of positive ones. Reappraisal was the strategy that was most helpful with alleviating the effect of negative emotions and fostering that of positive emotions. The results also indicated that the use of suppression was inadequate in the process of reducing the expression of negative emotions. In addition, the same strategy hindered the teachers' expression of positive emotions. According to the authors, antecedent-focused strategies, such as reappraisal, are preferable to response-focused ones, for instance, suppression.

Research conducted by Lee and colleagues (2016) investigated teacher emotions and their relation to emotion regulation and emotional labor strategies. A total of 189 secondary school from southern Germany teachers partook in the study. Furthermore, three distinct questionnaires were used to obtain data on the teachers' discrete emotions, their emotion

regulation, and emotional labor strategies. The hypotheses posed aimed at establishing relationships between reappraisal and deep acting, suppression and surface acting, alongside reappraisal and deep acting with positive emotions and surface acting and suppression with negative emotions. According to the results, the authors found positive relations between reappraisal and deep acting and suppression and surface acting. Though positive correlations were established, they were not particularly strong. In addition, the findings also indicated a low correlation between suppression and surface acting. In terms of discrete emotions, reappraisal was positively associated with enjoyment, while deep acting was negatively tied to negative emotions, such as anger and frustration. A stronger relationship was noted between emotional labor strategies and teacher emotions than between teacher emotions and emotion regulation strategies.

Second Language Teacher Emotion Regulation. The studies pertaining to the use of emotion regulation strategies in the context of second language teaching fall within the scope of this section. Emotion regulation of foreign language teachers will be considered with regards to their well-being (Talbot & Mercer, 2019), emotion regulation goals and strategies (Chahkandi & Rasekh, 2016; Akbari & Samar, Kiany, & Tahernia, 2017), negative emotions (Tejeda, Gonzalez, & Martinez, 2016), teacher self-regulation, teaching effectiveness, and burnout (Toussi, Boori, & Ghanizadeh, 2011; Ghanizadeh & Royaei, 2015).

The first and the most recent study to be discussed was carried out by Talbot and Mercer (2019) which set out to investigate the relationship between language teachers' perceptions of their well-being and the strategies used to safeguard it. The authors involved 12 tertiary-level ESL/EFL teachers from the United States, Japan, and Austria, and asked them to take part in a series of 12 interviews designed to elicit information about the challenges of their profession, the facilitating/detrimental aspects related to their well-being, as well as the strategies they use to maintain it. The results of the study showed that teacher emotion regulation was carried out through problem-focused action. Furthermore, the emotions displayed, and emotional triggers could not be identified as purely positive or negative. One example refers to collaboration with colleagues where that form of work might be viewed as instigating positive emotions by some and negative by others; moreover, the individual determines the type of emotion and gauges how it affects their well-being. As regards to their regulatory processes, the teachers used strategies to combat the negative emotions and to focus on the positive sides of the teaching profession. For instance, aiding

others brought out the positive sides of teaching. Considering the fact that teachers experience a wide range of emotions, it is important to note the relevance of teachers' cognitive perceptions of those emotions in the process of comprehending them.

The study conducted by Chahkandi and colleagues (2016) concentrated on exploring the emotion regulation strategies employed by efficacious English teachers in Iran. The research was qualitative in nature given that it employed both interviews and teacher diaries. The study aimed to discover more about the teachers' goals for using strategies to regulate positive and negative emotions. While the authors gathered 22 teachers to partake in interviews, 12 of them were asked to keep a diary. Those teachers were among the top 20% in terms of their teaching efficacy. The results obtained pointed to different reasons related to emotion regulation. The teachers revealed that they regulated positive emotions to maintain their authority, promote their teaching efficacy, and to portray an impartial teacher image. When it comes to negative emotions, the teachers attested to regulating them to improve their rapport with the students, to present themselves as moral guides, and to ensure their and their students' mental health. The findings also corroborated the teachers' use of diverse emotion regulation strategies, both antecedent-focused and response-focused ones. The authors also reported some interesting results pertaining to the effect culture has on the choice of strategies. For instance, while teachers belonging to other cultures may resort to using preventive strategies less, such as situation selection, the teachers in this study admitted to using them more. As regards to the classroom-unrelated emotions, the teachers in this study said they suppressed them, while teachers in other cultural contexts were in the practice of exhibiting them openly.

Another qualitative based study was conducted by Akbari and colleagues (2017) which included a sample of 19 EFL teachers employed in private language institutes and public schools in Iran. The teachers took part in a semi-structured interview that focused on their emotion regulation behavior in class. The data obtained was analyzed and then classified in accordance with Gross's Process model of emotion regulation. According to the results of this study, the teachers revealed the proclivity toward remaining in their emotional comfort zone. This would indicate that they carefully selected situations which would not require much effort to regulate their emotions. Teachers reported using attention direction strategies when faced with unpleasant situations, for instance, pretending they do not notice student misbehavior. Reappraisal was another reported strategy and it involved teachers considering mitigating factors before class so they could alter their position toward an unwanted situation, such as thinking of the student's age and their inability to control their behavior. This goes in

line with the finding that context-related avoidance strategies were used by all teachers so they could avert negative emotions from occurring.

The following study is intriguing in that it concentrated on novice teachers and their regulatory practices related to negative emotions. Tejeda and her colleagues (2016) carried out a qualitative research that employed both semi-structured interviews and observations to uncover how novice EFL teachers regulate their negative emotions. The sample consisted of five novice teachers who were interviewed by the authors and whose lessons they observed. Once the authors subjected the data to qualitative analysis, the emerging findings pointed to a diverse use of emotion regulation strategies. To illustrate, novice teachers admitted utilizing both preventive and responsive strategies; moreover, these strategies ranged from situation selection and cognitive change to modification of one's emotional experience and expression. In addition, the selection of the situation was affected by the teachers' self-efficacy beliefs. Teachers that displayed low self-efficacy opted to avoid working with students of a certain level of proficiency or age. Emotional labor was also noted in the case of some teachers as they attempted to modify their emotional expression even though it was not in line with how they truly felt (i.e. masking emotions).

The remaining studies were primarily directed at EFL teachers' self-regulation and the relation to burnout or teaching efficacy. It should be stated that these papers did not focus on teacher emotion regulation explicitly. Emotional management was mentioned as a component related to self-regulation. To exemplify, Toussi and colleagues (2011) investigated the relations between EFL teachers' self-regulation practices and teaching efficacy. The sample involved 76 Iranian EFL teachers and included two questionnaires which were administered with the aim of determining how they self-regulate in class and how it pertains to their teaching efficacy. Emotional control was one of the components of self-regulation. The results showed that teacher success was highly correlated with intrinsic interest, mastery-goal orientation, and emotional control. The authors remarked that highly efficacious teachers know how to utilize appropriate strategies for emotion regulation. This finding corresponds to majority of the research on the topic.

Another interesting study was conducted by Ghanizadeh and Royaei (2015) and its aim was to investigate how the emotion regulation and emotional labor strategies of EFL teachers affect teacher burnout. The sample was comprised of 153 Iranian EFL teachers working in different language institutes. The teachers were administered three distinct instruments – the Emotion Regulation Questionnaire, the Teacher Emotional Labor Strategy Scale, and the Maslach Burnout Inventory. Based on the results, the authors concluded that

both emotion regulation and emotional labor strategies negatively impact teacher burnout. In addition, significant correlation was noted between all three strategies of emotional labor (i.e. deep acting, surface acting, and naturally felt emotions) and burnout depletion. Of all the strategies, deep acting caused the highest risk of burnout among the teachers in the study. Conversely, the natural display of emotions was found to diminish the level of burnout among the Iranian EFL teachers. As regards to the emotion regulation strategies, the authors found that reappraisal and suppression have the same relationship to burnout; in other words, emotion regulation strategies had a negative impact on teacher burnout. Consequently, the authors concluded that teachers who do not employ emotion regulation strategies of some sort are more prone to experience burnout than teachers who do.

2.4. Emotional Labor

This section will examine the concept of emotional labor by examining its characteristics, pertinent theoretical background, as well as the approaches to the study of emotional labor. Lastly, research on the use of strategies in the general and second language teaching context will be discussed.

Defining Emotional Labor. Many researchers have dealt with the notion of emotional labor; moreover, several definitions were proposed in hopes of defining it and identifying its components. The upcoming segment will provide an overview of such definitions as proposed by Hochschild (1983), Morris and Feldman (1996), Zapf, Vogt, Seifert, Mertini, and Isic (1999), Grandey (2000), Williams-Johnson, Cross, Hong, Aultman, Osbon, and Schutz (2008), and Yin and Lee (2012). The term emotional labor was coined by Hochschild (1983, p. 7) who stated that it denotes “the management of feeling to create a publicly observable facial and bodily display.” Other definitions, like the ones put forth by Morris and Feldman, Zapf and colleagues, and Grandey, highlighted the role one’s job or profession has in the process of regulating our emotions. For instance, Morris and Feldman’s theory refers to emotional labor as the process which entails expending effort, planning and management in order to display emotions that are acceptable in an organization during interpersonal encounters.

Similar notions can be observed in Zapf and colleagues' interpretation of emotional labor who emphasize the disparity between the emotions one truly feels and those that are permitted/discouraged within the scope of one's profession. Though Grandey's definition goes in line with the ones mentioned so far, in terms of displaying emotions according to organizational rules, it also refers to one's management of internal and expressive emotional components.

The definitions proposed by Williams-Johnson and colleagues (2008) and Yin and Lee (2012) are concerned with the concept of emotional labor within the teaching context. To illustrate, Williams-Johnson and colleagues refer to emotional labor as standards and norms that guide the teacher's display of emotions during classroom interactions. The authors also claim that teachers invest effort into portraying certain roles or identities while dealing with students. Teachers are the ones who decide whether to express or suppress their emotions based on their needs during the activities they are engaged in. Yin and Lee see emotional labor as a process during which teachers try to instigate, control, or mask their emotions in accordance with the rules of the teaching profession.

Alongside definitions, it is necessary to consider various aspects of emotional labor. To get a better understanding of the nature of emotional labor, different aspects and strategies pertaining to the subject matter will be discussed. The first author to be mentioned is Hochschild (1983) who put forth two distinct emotional labor strategies: 1) surface acting, and 2) deep acting. To exemplify, surface acting requires a person to fake emotions they do not feel, or simply to hide the emotions experienced, whereas deep acting refers to a person's attempt to modify their inner emotional state so they could feel the emotion they desire. Employees may, for instance, engage in specific thought processes or activities designed to facilitate the arousal of the desired emotions. Conversely, attempting surface acting can only result in faking or suppressing the desired emotions rather than truly evoking them (Humphrey, Ashforth, & Diefendorff, 2015). Yin (2012) expanded the model of emotional labor strategies by adding a third strategy – naturally felt emotions strategy. This strategy describes the situation in which an individual simultaneously experiences and expresses the emotion that is fitting for their profession.

When addressing the conceptualization of emotional labor, Brotheridge and Grandey (2002) underlined two aspects of emotional labor: 1) job-focused emotional labor, and 2) employee-focused emotional labor. The first aspect indicates the amount of emotional demand within one's profession. The latter refers to an employee's practices of emotion management in attempt to attain job requirements. As regards to the teaching profession,

research has shown that the following three aspects (as proposed by Hochschild, 1993), which require emotional labor, can be applied in the classroom context: 1) teaching requires a face-to-face interaction among teachers and other people; 2) teachers are required to express positive and negative emotions while teaching; and 3) teachers' performance is affected by various external factors, such as norms of profession or culture (Ghanizadeh & Royaei, 2015).

Emotional Labor and Teaching. Having explained the notion of emotional labor and delineated its key components, the question of how emotional labor affects teachers and their performance in class must be addressed. Given that the focal point is on the classroom context, an indirect reference will also be made to students since they are affected by the teachers' display and management of emotions. Kinman and colleagues (2011) reflected on how emotional labor influences UK teachers. According to these authors, emotional labor can have a detrimental effect on one's well-being as the process demands a continual use of emotion regulation strategies in hopes of accommodating the norms of profession. In addition, frequent use of emotion regulation strategies often leads to emotional exhaustion. As regards to teaching, the authors also mentioned that teachers can start exhibiting certain signs of burnout, for instance, they may start depersonalizing their students or have diminished feelings of personal success. The relationship between emotional labor and job satisfaction has been studied by several authors (e.g. Zapf et al., 1999). When analyzing the findings of different researchers, one might notice a discrepancy in their interpretation of the effects emotional labor has on one's job satisfaction. For example, some hold that the constant necessity for emotion regulation reduces one's job satisfaction, while others believe that adequate emotional management can foster satisfaction with one's profession. Sutton (2004) argues that there is proof of job effectiveness being raised by teachers' appropriate use of emotion regulation strategies. Alongside research on the general effects of emotional labor on teachers, there are studies that have focused on the impact of specific strategies.

When investigating individual strategies, such as surface and deep acting, research has indicated their relation to depersonalization, emotional exhaustion, and personal accomplishment. Näring, Briët, and Brouwers (2006) found that surface acting correlated positively to teacher depersonalization and emotional exhaustion and negatively to personal accomplishment. Deep acting, on the other hand, was negatively associated with depersonalization and emotional exhaustion. Similar results were reported by Philipp and Schüpbach (2010) who found that long-term use of deep acting diminished teacher emotional

exhaustion, while long-term surface acting led to signs of emotional exhaustion. Tsouloupas, Carson, Matthews, Grawitch, and Barber (2010) confirmed Philipp and Schüpbach's findings and found that teachers who expressively suppressed their emotions reported an increase in their emotional exhaustion. Carson (2007) also reflected on surface acting in his study. The results obtained showed that surface acting or engaging in faking emotions increased chances of teacher burnout.

There are studies, such as the one carried out by Burić (2019) that revealed how faking emotions can facilitate student performance in class. The study in question aimed to investigate the role emotional labor has in explaining enthusiasm among teachers. The results suggested that by pretending to experience positive emotions, such as pride, teachers can increase students' intrinsic motivation and promote general affect of the entire classroom. Teachers' use of surface acting and deep acting was also related to specific positive and negative emotions in the classroom. According to Burić, Slišković, and Penezić (2019), teachers that display positive emotions, such as joy or love, will be more likely to utilize deep acting so that they could increase the intensity of positive emotions that are considered desirable in the classroom. Conversely, teachers that exhibit negative emotions, such as anger, will engage in surface acting so that they can suppress the negative emotional experience and conform to the norms of the teaching profession. In addition, the findings of this study also revealed that strategies such as deep acting positively impacted teacher joy. Surface acting, on the other hand, positively reflected on teacher hopelessness.

Keller, Chang, Becker, Goetz, and Frenzel (2014) conducted a study on teachers' emotional experiences and exhaustion which were considered predictors of emotional labor. The findings of their research partly go in line with the results reported by Burić et al. (2019). To exemplify, the teachers' experience of positive emotions, such as enjoyment, was negatively tied to emotional labor. In other words, teachers that experience enjoyment in class frequently do not resort to emotional labor strategies as much. The teachers in the study admitted using surface acting in one third of the lessons. Moreover, emotional labor was tied to teacher anger on an inter-individual level. When looking at the intra-individual level, emotional labor was mentioned with regards to the teachers' experience of anxiety.

Emotional Labor in the Second Language Teaching Context. The goal of this sub-section is to give an overview of research conducted on emotional labor among second language teachers. The studies on EFL teachers' use of emotional labor strategies include Ghanizadeh and Royaei (2015), Loh and Liew (2016), Gkonou and Miller (2017), Kim and Kim (2018), Petrie and Darragh (2018), and King (2016) who have carried out research on teachers working in different educational contexts. Ghanizadeh and Royaei's (2015) study focused on examination of teacher emotion regulation and emotional labor strategies as predictors of burnout. The authors involved 153 EFL teachers from northeastern Iran who were employed in different language institutes. Three questionnaires (testing emotion regulation, emotional labor, and burnout) were administered at the beginning of the study. The results indicated that emotion regulation and emotional labor strategies have a detrimental effect on teacher burnout. Moreover, the findings pointed to a relationship between emotional labor strategies (surface acting, deep acting, and naturally shown emotions) and burnout depletion. The authors stated that deep acting causes emotional exhaustion and decreases depersonalization. Surface acting strategies tend to reduce teacher burnout, but not to the same extent as deep acting strategies. As far as naturally felt emotions is concerned, the study found it to be negatively correlated to teacher burnout.

The study conducted by Loh and Liew (2016) was aimed at exploring emotional labor among 10 secondary teachers of English in Singapore using interviews. The authors attempted to find out what tensions or job-related discord resulted in the use of emotional labor strategies. According to the findings, the teachers reported the disparity between the training they received as English teachers and their professional public life. Government's role was underscored as it strived for the promotion of economic competitiveness by means of English literacy. As regards to the emotional labor among the participants, it was found in several domains. For instance, one such case was depicted in the discrepancy between the government's mandate to use the language for economic benefit and the teachers' hope to promote critical thinking among their learners and make them ready to use it in the real world. Another emotional labor-related aspect referred to the evaluation of teachers based on their students' scores. The third aspect indicated the process of grading students' papers. Emotional labor was prominent in this case as the teachers experienced stress having to read so many papers, as well as being directed to grade them despite the element of subjectivity.

Gkonou and Miller's (2017) study focused on exploring how Greek EFL teachers tend to students with language anxiety. Though not exclusively targeting emotional labor, it made a reference to it as an integral part of teacher care. A total of eight EFL teachers took part in the study by consenting to be interviewed. The results showed that Greek EFL teachers took great care of their students and that their teaching practice was reflective of emotional labor. They also expended effort in creating a non-threatening, low-anxiety environment in the classroom, as well as showing affection toward their students. Emotional labor came as a result of the teachers' constant efforts to alleviate the students' anxiety, tend to their students' needs, and cope with their demanding schedules. The teachers suppressed their negative emotions in hopes of allaying their students' language anxiety. While this practice may be regarded as beneficial to the students, it is not good for the teachers' well-being or their performance.

Kim and Kim's (2018) research cast a wider net in their attempt to investigate Korean EFL teachers' emotional labor with regards to their students, parents, and the institution they work in. This study was also qualitative in nature given that three Korean EFL teachers were asked to participate in a semi-structured interview. The teachers in question taught English to young learners in different institutions: one teacher taught in a franchised institution, another teacher in a public school, and the last teacher in a private institute. According to the results of the study, the teachers reported engaging in emotional labor strategies. To illustrate, the teachers admitted using surface acting or suppressing negative emotions when they observed their students' inactivity. Furthermore, given the students' age, teachers frequently faked experiencing positive emotions so they could motivate them and encourage them to participate. Emotion regulation was also noted in relation to student proficiency level, namely the teachers worked with mixed-ability classes and they found it challenging to teach all of them efficiently. Another form of emotional labor was observed in connection to parents and institution. The parents in Korea expect to see progress in their children's proficiency; moreover, language teachers are burdened by their desires and the institutional policy to adhere to a demanding program.

Petrie and Darragh (2018) carried out an intriguing research in the aftermath of the signing of Executive Orders 13, 767 and 13, 769 in the United States which aimed to restrict the resettlement and immigration of refugees. This act had a detrimental impact on English language learners and the authors set out to investigate the matter by interviewing eight teachers teaching at K-12 level. The teachers worked in various contexts, such as English language development classrooms, newcomer centers, sheltered content classrooms, and

others. The thematic analysis revealed that both the students and teachers were encouraged to experience fear after the signing of said Orders. The students were exposed to messages that attempted to evoke fear among them and the teachers demonstrated genuine concern. The teachers did their best to defuse the situation by diminishing their impact and by countering the negative messages. Furthermore, emotional labor occurred when the emotions experienced did not coincide with their professional ethics. Though they expended effort to maintain the integrity of the TESOL profession, there were situations when they refused to abide by the prescribed rules of conduct and shared personal political viewpoints with the aim of showing support for their students. By being united in their show of care and mutual understanding, the teachers alleviated each other's emotional labor.

King's (2016) study was envisioned as a small-scale research that utilized semi-structured interviews to investigate Japanese university EFL teachers' perceptions and beliefs with regards to emotional labor. The questions were designed to probe into the situations that warranted the teachers' use of emotion regulation strategies, as well as the emotional labor that was precipitated by the demands of the teaching vocation. According to the results of the research, the teachers' identities were heavily influenced and shaped by the display of care toward their students. As far as emotional labor is concerned, there were instances when Japanese students would not cooperate while performing learning tasks. Though such situations evoked negative emotions such as irritation, anger, or frustration, the teachers suppressed them and opted to display a positive face. All the respondents were quite aware of their role as teachers who were expected to ensure a learning-conducive learning setting. Silence was another relevant theme that emerged in the results, namely some teachers construed it as a deliberate form of hindering L2 communication. Despite the fact that the teachers in the study engaged in surface acting in order to facilitate their students' performance, the author remarked that emotional dissonance can occur due to teachers' portrayal of emotions they do not have; in addition, such practice can prove to be stressful in the long run and teachers need to find a way of protecting themselves.

2.5. Research on Teachers' Motivational Beliefs, Emotions, and Emotion Regulation

The relationship between teachers' beliefs, emotions, identities, and emotion management has been documented by many authors. For instance, Schutz, Hong, and Osbon (2007), Cross and Hong (2009), and Wolff and De Costa (2017) discussed how teachers' beliefs and identity are strongly tied to the emotions they experience. A study carried out by Lohbeck, Hagenauer, and Frenzel (2018) investigated the separability of various dimensions of teacher self-concept and their relationship with emotions. Caires et al. (2012), Brigido et al. (2013), Burić and Macuka (2017) investigated the ties between teacher emotions and their self-efficacy. Scholars such as Taxer and Frenzel (2015), Lee and van Vlack (2017), and Lee et al. (2016) contributed to the research on teacher emotions and emotion regulation practices. Some, for instance Burić and Frenzel (2019), investigated the teacher emotional labor in regards to instructional strategies and students' academic achievement. This section will not discuss all of the studies listed above since some of them have already been addressed earlier in this paper.

In terms of teacher self-concept, identity, and emotions, the study conducted by Wolff and De Costa (2017) is noteworthy as it examined teacher identity development in relation to teacher emotions. The research was based on the narratives of a Bangladeshi teacher of English obtained from semi-structured interviews, class observations, stimulated verbal and written reports, as well as journal entries. The abundance of data gathered gave insight into the teacher's motivation for language learning and teaching, her identity crisis, development, as well as her new outlook on teaching. According to the findings, the teacher, named Puja, lived in a rural setting in Bangladesh. Her desire to learn and, eventually, teach English was fueled by a limited access to resources in her surroundings. Having obtained her undergraduate and graduate degrees from the university in Dhaka, she was offered a scholarship to purpose a two-year-long MATESOL degree in the U.S. Her identity became threatened upon facing the American culture; moreover, she experienced anxiety and worry because she noticed the disparity between herself and American teachers of English. One aspect of her identity, that is her ideal teacher self, became evident in her desire to become better and improve her pronunciation. Her view of the teaching profession changed as well. In Bangladesh, teachers are highly esteemed (seen like deities), whereas the teachers in the U.S. were less valued. In time, having obtained her degree from an American university, she modified her image of teacher to include the roles of helper and friend.

Another study, carried out by Lohbeck, Hagenauer, and Frenzel (2018), focused on different dimensions of teacher self-concept and teacher emotions. The study investigated the separability of six distinct domains of teacher self-concept: pedagogical skills, subject content knowledge, consulting, innovation, media use, and diagnostics. These constructs were examined in relation to specific teacher emotions, that is enjoyment, anger, and anxiety. The sample consisted of 248 primary and secondary school teachers in Germany, Lower Saxony. It was noted that primary school teachers generally teach all subjects, while secondary school teachers teach only two subjects. Two separate instruments were used to gather the data, one for teacher self-concept and another for teacher emotions. The findings showed that the teachers' self-concept domains and said emotions were separable. Furthermore, all six teacher concept aspects were positively associated with enjoyment, while most of them were negatively associated with anger and anxiety. In terms of viewing which domains of self-concept can act as predictors of emotions, the results revealed that the self-concept pertaining to pedagogical skills was significantly and positively related to enjoyment, and negatively tied to anger. In addition, self-concept of subject content knowledge was significantly and negatively associated with anxiety.

When it comes to the relationship between teacher emotions and self-efficacy, Caires et al. (2012) and Brigido et al. (2013) carried out studies among prospective and current teachers of science and art. Caires et al.'s (2012) study was directed at examining the student teachers' thoughts, perceptions and emotions related to teaching practice. A sample consisted of 295 student teachers taking art and science courses. The participants conducted their teaching practice in different high schools, both urban and rural. The research was designed to explore the participants' experiences and perceptions regarding: 1) learning and supervision; 2) professional and institutional socialization; 3) emotional and physical impact; and 4) career aspects, alongside the relations between the four aspects listed. The findings pointed to varied aspects of the participants' experiences and perceptions. To illustrate, teaching practice was seen as quite challenging and stressful, with notable episodes of vulnerability, weariness, and changes of psychological and physiological nature. Moreover, the time student teachers had spent in teaching practice led to the increase in their self-efficacy. Specifically, they reported the improvement of their knowledge, skills, flexibility, and improvisation when engaging with the learners. The results, among other things, also revealed the interconnectedness between the four aspects. For example, the adaptation or satisfaction in one of these aspects was associated with adaptation or satisfaction in another.

The second study, conducted by Brigido et al. (2013), investigated prospective science teachers' self-efficacy in relation to the emotions experienced. A total of 188 prospective teachers at the Education Faculty of the University of Extremadura, Spain, were involved in the research. The authors' goal was to determine the relationship between the participants' emotion recall when they were science students and the emotions they were expecting to experience as future teachers. Another aim was to analyze the relation between the participants' self-efficacy and the emotions they expected to encounter as future science teahers. The authors differentiated between the content of the 'nature sciences' (e.g. biology) and that of the 'hard sciences' (e.g. physics). Based on the findings the authors found that prospective science teachers' emotions differ according to the content related, i.e. nature or hard sciences. To exemplify, positive emotions were primarily associated with nature sciences, whereas negative emotions prevailed in the hard sciences. Furthermore, the participants' emotions experienced as learners corresponded to those they expected to experience as future teachers. The authors also found that emotions and attitudes toward science degrade with each new level of education. The negative emotions, according to the results, may be caused by the students' lack of confidence in dealing with hard sciences, such as physics. These negative emotions also foster negative attitudes among the students. On the other hand, prospective science teachers felt highly confident in their ability to teach in the future. Specifically, their high level of self-efficacy was tied to helping learners with practical activities and teaching science content.

The following studies, carried out by Taxer and Frenzel (2015) and Burić and Frenzel (2019), addressed the relationship between teacher emotions and emotion regulation practices. Taxer and Frenzel's (2015) study set out to investigate how often teachers engage in emotional labor, in this case hiding negative emotions in the classroom. The sample consisted of 266 American secondary school teachers. The research was designed to examine 10 discrete negative emotions (some of which included anxiety, anger, and sadness), in relation to the following critical constructs: teacher self-efficacy and teachers' mental health. According to the findings, the frequency of hiding negative emotions points to the fact that American teachers do engage in emotion regulation in their classrooms. In addition, this type of emotion regulation was negatively associated with physical health. The analysis conducted on a discrete level suggested that, among other emotions examined, teachers frequently hide anger, disliking, and disappointment. The findings revealed that not all unpleasant emotions are linked with each of the critical constructs. Moreover, the infrequently hidden emotions can be just as detrimental to the teachers' mental and physical health as the frequently hidden

ones. The authors supported this with the example that the participants did not admit to frequent masking of helplessness. However, that does not negate the fact that detrimental impact can be seen when they do try to hide it.

Lastly, the study carried out by Burić and Frenzel (2019) aimed to examine the relations between teachers' emotional labor, class-perceived instructional strategies, and students' academic engagement. The sample consisted of 95 high-school teachers and 2111 high-school students. The data was analyzed by means of doubly latent multilevel SEM. The findings of the research revealed systematic associations between the emotional labor strategies employed by the teachers, the instructional strategies perceived by the class, and the students' self-reported engagement. Specifically, the more the teachers engaged in masking or suppressing of their emotions in class, the lower was the students' perception of the instructional strategies utilized. Moreover, the level of engagement of the entire class was positively associated with the teachers' faking emotions.

CHAPTER 3: AIM AND METHOD

3. Aim and Method

The section below presents the Aim and Method part of the thesis. The research used mixed methods and it comprised two segments: 1) qualitative phase which utilized a teacher diary to investigate the relationship between teachers' motivational beliefs, emotions, and emotional labor strategies; and 2) quantitative phase which used a six-part questionnaire designed to examine the mediating role of emotional labor in order to describe the relationship between teacher's motivational beliefs and their emotions.

3.1. Aim

The general aim of this research is to explore the relationship between second language teacher motivational beliefs and the emotions teachers experience while teaching and interacting with students, along with strategies they use to regulate their emotions. This study also aims to investigate the role emotions and emotion regulation have in explaining various motivational aspects of Croatian teachers of English, including self-efficacy and self-concept.

3.1.1. Research Questions

1) To explore the relationship between second language teacher motivational beliefs and the emotions teachers experience while teaching and in their interactions with students, along with emotional labor strategies they use to regulate them.

2) To investigate the mediating role of emotional labor in explaining the relationship between second language teacher emotions and motivational beliefs (self-efficacy and self-concept).

3.1.2. Hypotheses

The hypotheses postulated solely pertain to the quantitative portion of the research.

H2a Teachers who experience higher levels of positive emotions, such as joy and pride, and use deep acting as a strategy, will display higher levels of self-efficacy and self-concept.

H2b Teachers who experience higher levels of negative emotions, such as anger and anxiety, and use superficial acting as an emotion regulation strategy, have lower levels of self-efficacy and self-concept.

H2c Teachers who experience higher levels of positive emotions, such as joy and pride, and use naturally felt emotions as an emotion regulation strategy, have higher levels of self-efficacy and self-concept.

H2d Emotional labor strategies partially mediate the relationship between emotions and motivational beliefs. In other words, emotions contribute in explaining self-efficacy and self-concept directly, as well as indirectly, by means of emotional labor.

3.2. Method

3.2.1. Sample

The sample consisted of 320 Croatian teachers of English. The respondents were mainly employed in primary (55%) and secondary schools (40.31%). The remainder of the sample included teachers who were employed in primary and secondary schools (1.25%), foreign language schools (1.87%), adult education schools (0.62%), and various faculties (0.94%). This encompassed 24 males (7.5%) and 296 females (92.5%). The respondents' age ranged from 24 to 64 years, while their working experience ranged from 2 years to 40 years.

Of the total number of teachers that took part in the study, 21 of them participated in the qualitative portion of research, that is, completed the diary. At the time of data collection, the participants were on average 36.78 years old (SD = 5.42) and had 11.78 years of working experience (SD = 5.40). Of the 21 primary and secondary Croatian English language teachers, 17 (80.9 %) were female, and 4 were male (19%). Furthermore, 11 teachers were employed in primary schools and 10 in secondary schools. The respondents were employed in schools in seven counties: Osijek-Baranja, Vukovar-Srijem, Brod-Posavina, Bjelovar-Bilogora, Zagreb, Karlovac, and Zadar.

A sample of this size is considered acceptable in qualitative research however, it must be mentioned that the overall number of participants was somewhat smaller than the number of the respondents that had initially agreed to participate in this part of the study. Some of the respondents abstained due to personal and/or professional reasons. Though some teachers stated, in advance, that they would not be able to fully commit to the study, others may have forgotten or neglected to take part. Dörnyei (2007) confirms this by stating that the number of entries tends to decline if the respondents are, for instance, going through a stressful period.

3.2.2. Instruments

Two separate instruments were used in this study: a teacher's diary in the qualitative part of the study and a questionnaire in the quantitative part. With regards to the qualitative part, the instrument included seven questions related to teacher's emotions, the causes for these emotions, the classroom activities involved at the time, how they regulated their emotions, and two questions pertaining to their ideal teacher self-image and their teaching self-efficacy. The instrument was partly based on the teacher diary proposed by Chahkandi, Rasekh, Tavakoli (2016); however, additional modifications were made to make the instrument more appropriate for the context of this study. For the first question, specific emotions (N=25) were provided which the respondents had to identify, such as joy, anger, enthusiasm, disgust, boredom, pride, anxiety, satisfaction, powerlessness, and so on. An additional option was offered so that the respondents could supply other emotions that were not listed. The second question required the teachers to specify the cause(s) of each emotion(s) they experienced. The third question probed into the activities they were engaged in when experiencing the emotion(s) (e.g. grammar exercise). Questions 4 and 5 were related to emotion regulation. While question number 4 asked whether they engaged in the process of emotion regulation, the fifth question asked them to recount what strategies they used to regulate those emotions. Questions 6 and 7 were open-ended and focused on teachers' ideal teacher self-image, as well as their teaching self-efficacy beliefs respectively. In other words, the respondents were asked how they saw themselves as teachers in the future after each lesson, and how confident they were in their teaching abilities.

When it comes to the quantitative part, data was gathered by means of a six-part questionnaire. The first part outlined the purpose of the study, and required the participants to provide general information (gender, age, years of working experience, place of employment), as well as to rate their job satisfaction. The second part contained the 'Foreign Language Self Concept Scale' based on Kubanyiova's (2009) *Possible Language Teacher Self* model. It focused on exploring the respondents' ideal teacher self, ought-to self, and feared self- concept. The scale contained 8 items and it adopted a 5-point Likert scale, ranging from 1 (strongly disagree) to 5 (strongly agree) to measure how foreign language teachers perceive themselves (e.g. If I do not appear motivated and engaged when teaching English, I will disappoint my students).

The third part of the questionnaire investigated teachers' self-efficacy by means of the 'Teacher Self-efficacy Scale' proposed by Tschannen Moran and Woolfolk Hoy (2001). The short form of the instrument was utilized, and it had 12 items containing three subscales: 1) Efficacy in student engagement; 2) Efficacy in instructional strategies and 3) Efficacy in classroom management. A 9-point scale was used ranging from 1 (nothing) to 9 (a great deal).To illustrate, the participants were asked to use the scale to rate their confidence in their ability to use instructional strategies (e.g. How confident are you that you can provide an alternative explanation, or example when students are confused?), classroom management strategies (e.g. How confident are you that you can establish a classroom management system with each group of students), and student engagement strategies (e.g. How confident are you that you can motivate students who show low interest in school work?). The fourth part consisted of the 'Foreign Language Teacher Self-Efficacy Scale' designed by Swanson (2010). The instrument measured self-efficacy beliefs of foreign language teachers and was comprised of ten items grouped in two clusters: 1) Content knowledge and 2) Teacher as facilitator. The scale ranged from 0 (cannot do at all) to 100 (highly certain can do). The scale was utilized to rate the teachers' confidence in their content knowledge (e.g. How much confidence to have a conversation with a native speaker in the language(s) you teach?), and being teacher as facilitator (e.g. How much confidence to motivate your students to learn about the language(s) you teach?). The fifth section of the questionnaire was intended to probe into the emotions that are considered most significant for teachers. The instrument used was the 'Teacher Emotion Questionnaire' (Burić, Slišković, & Macuka, 2017) and it contained six sub-scales: 1) Joy; 2) Pride; 3) Love; 4) Anger; 5) Fatigue/Exhaustion, and 6) Hopelessness. The scale adopted a 5-point scale (1-strongly disagree – 5 strongly agree) which teachers used to indicate the agreement with each item. The final part of the

questionnaire contained the 'Emotional Labor Scale' (Burić & Slišković, 2016). The adapted version of this instrument consisted of three strategy clusters (subscales): 1) Surface acting; 2) Deep acting, and 3) Naturally Felt Emotions. Each subscale has three items. While the first two subscales were taken from Brotheridge and Lee (2003), the third was taken from Yin (2012). The scale used a 5-point Likert scale (1-never to 5- always) to allow participants to express how often they use a certain strategy. To exemplify, the teachers were asked to use the scale provided to indicate how frequently they engaged in surface acting (e.g. I put on an act in order to deal with students in an appropriate way.), deep acting (e.g. I work at developing the feelings inside of me that I need to show to students.), and the display of naturally felt emotions (e.g. The emotions I express are genuine.). The Cronbach's Alpha coefficient was calculated for each scale. The results showed that the scales showed good internal consistency. The results of the Teachers Sense of Efficacy Scale were as follows: α= .77 for Instructional Strategies, α = .88 for Classroom Management, and α = .76 for Student Engagement. When it comes to Foreign Language Teacher Efficacy Scale, the results were: α = .80 for Content Knowledge and α = .84 for Teacher as Facilitator. The Foreign Language Teacher Self-Concept scale showed weaker internal consistency with the result of α = .65. With respect to the Teacher Emotion Questionnaire the subscale results were as follows: α =.69 for Joy, α = .84 for Pride, α = .87 for Love, α = .78 for Anger, α = .92 for Fatigue/Exhaustion, and α = .80 for Hopelessness. Lastly, the results of the Teacher Emotional Labor Scale indicated an acceptable internal consistency across all subscales: α = .83 for Surface Acting, α = .73 for Deep Acting, and α = .80 for Naturally Felt Emotions.

3.2.3. Procedures

In terms of qualitative part of the study, the first step involved informing the prospective participants of the nature of the study (the aim and procedures involved). Ethical principles were adhered to as the teachers in the study were told that their identities would not be revealed, their participation in the research was purely voluntary, and that the results obtained would be used solely for research purposes. Once they agreed to partake in the study, the next step involved creating an online group to which the respondents would be added. It was an 'invitation-only' group created on Facebook, and it allowed the teachers to receive important notifications simultaneously. The Teacher Diary was presented in an online form. The

instrument itself was created by means of the Google Forms software to make it more accessible and comprehensible to the respondents.

Entries in the diary, which lasted for 10 working days, employed a signal-contingent entry design (Dörnyei, 2007). This means that the participants were notified at the end of each working day via Facebook to complete the survey. Attached to the notification was a link that allowed access to the diary. Considering the dynamic of the teaching profession, such an approach was deemed most appropriate in the hope of preventing the respondents from forgetting to take the survey. Additional information, when needed, was provided in-group.

With regards to the quantitative section of the study, it is important to note that all the scales mentioned earlier were part of a single questionnaire, which was created and administered to the respondents by means of Survey Monkey – an online tool designed for creating surveys. Once created, the online survey was disseminated through various parties, such as senior advisors working for the Education and Teacher Training Agency, members of the Croatian Association of Teachers of English, colleagues and friends working in different educational institutions. The respondents were informed of the nature of the research and assured of its confidentiality. In other words, they were told that partaking in the research would be voluntary and that every teacher's identity would remain anonymous.

3.2.4. Data Analysis

Teacher diaries were subjected to directed content analysis (Hsieh & Shannon, 2005), which involves reading the content, highlighting relevant passages then coding them using predetermined categories. Qualitative categories in this study were pre-determined by the items/questions in the instrument, for instance, the emotions experienced, their causes, classroom activities they were engaged in when experiencing the emotion(s), emotion regulation strategies used, and how the events/emotions of the day affected their ideal teacher self- image and the participants' confidence in their teaching abilities.

The first stage of data analysis involved determining the frequency of the individual emotions experienced by Croatian teachers of English. This was followed by careful examination of the causes, classroom activities involved while experiencing the emotions, as well as emotion regulation strategies applied during the lesson. Once all the emotions, with their respective components, were categorized, it was necessary to see if the causes listed

within each emotion could be clustered under certain categories. Those categories were presented according to their frequency of occurrence. Establishing relations between similar or the same categories across different positive or negative emotions was the next step.

The second stage focused on the teachers' ideal teacher self-image and the respondents' perception of their teaching abilities in relation to various classroom activities and emotions. In order to extrapolate the elements upon which Croatian teachers construct their ideal teacher self-image the responses were grouped into several categories which reflected various layers or images related to their teacher self-concept. In addition, the responses related to their teacher self-efficacy were categorized under positive and negative emotions along with the classroom activities connected with these emotions.

Concerning the quantitative section, descriptive statistics analysis was carried out on the data gathered from the questionnaire. The data was entered in the IBM SPSS (Version 23) program and the descriptive analyses were conducted on each scale. Next, reliability of each scale was determined by calculating the Cronbach's Alpha coefficients. Correlation analysis was also conducted to determine the relationship between second language teacher motivational beliefs and the emotions teachers experience while teaching, as well as emotional labor strategies. Lastly, a Structural Equation Modeling (SEM) analysis was carried out with Mplus 8 (Muthén & Muthén, 1998-2017) to investigate the mediating role of emotion labor in explaining the relationship between second language teacher emotions and motivational beliefs.

CHAPTER 4: RESULTS

4. Results

The results obtained from this study will be presented in the section below.

4.1. Qualitative analysis – Teacher Diary

In this section, the results will be presented in two subsections: the first will address teachers' emotions and their causes, related classroom activities, as well as emotion regulation strategies used, while the second part will discuss teachers' ideal teacher self-images and their appraisal of their teaching self-efficacy. The first section will describe teachers' emotions, their causes, related classroom activities, emotion regulation strategies used, and images related to teachers' ideal teacher self. The images that emerged have been clustered into eight distinct categories. Each category is incorporated with corresponding emotions and classroom activities (if provided by the teachers). The second section will present the teachers' assessment of their teaching abilities (teaching self-efficacy) in relation to different emotions, including positive and negative emotions, as well as classroom activities associated with these emotions.

4.1.1. Teacher Emotions and their Causes

Teacher diary revealed a wide range of emotions experienced in the classroom, as well as causes that instigated them. According to the results, teachers in this study reported a total of 26 emotions. More specifically, 11 of them belonged to the positive/pleasant emotions category, while 15 of them belonged to the negative/unpleasant emotions category. To briefly illustrate, the category with pleasant emotions involved emotions such as satisfaction, enjoyment, pride, relief, to name a few, and the second category encompassed unpleasant emotions such as disappointment, sadness, anger, and other. The following sections will present the emotions, both pleasant and unpleasant, according to the frequency of their occurrence, and it will connect them to their respective causes. The most frequent emotions and causes will be elaborated on, while the less frequent ones will solely be mentioned.

Positive/Pleasant Teacher Emotions. The emotion with the highest frequency, according to the teachers in this study, was *satisfaction*. It was reported by 34 teachers and associated with seven distinct causes in the foreign language classroom: students' success in class, students' demonstration of knowledge, students' positive feedback, successfully held class, positive classroom atmosphere, having time to do other things, and student improvement. To elaborate, teachers experienced satisfaction when they observed their students' success in class (e.g. getting good grades, successfully acquiring teaching content) or when they behaved well and showed interest in what they were learning. The most frequently mentioned cause of teacher satisfaction was *students' success in class*. It was reported by eight teachers and was related to several circumstances, including students' success in solving a task, acquiring a new piece of information, and getting good grades. Another cause of the emotion, which was mentioned by seven teachers in the study, was students' *demonstration of knowledge*; in other words, students showed how much they had learned by using language properly. This demonstration of knowledge spans from properly using expressions for giving advice to producing grammatically correct utterances during an oral report. Receiving *positive feedback from students* was another major cause of teacher satisfaction with six teachers reporting feeling satisfied when hearing positive comments from their students. To illustrate, one teacher was satisfied when their students said they enjoyed the text they were working on, and as a result, they started using new words and phrases in class. The remaining, less frequent, causes of satisfaction included *a successfully held class*, *witnessing a positive classroom atmosphere* (e.g. student cooperation, show of interest), *having free time to do other things in class* (e.g. extra activities, paperwork), and *observing students' improvement* (e.g. usually negligent students who came prepared for class).

The second most prominent positive emotion among the teachers was *enjoyment*. It was reported by 20 teachers and said to have been evoked by several distinct causes, such as a positive classroom atmosphere, students' success in class, teaching content, good rapport with students, and others. When recalling experiencing enjoyment, seven teachers claimed to have felt it as a result of a *positive atmosphere within the classroom*. That included shared humor between the teacher and students, students' participation in class, as well as their attentiveness during class instruction. To briefly exemplify, one teacher specifically recalled experiencing enjoyment during a class discussion on heroic deeds and dangerous situations in which their students were quite interested in the topic and outspoken. Students' success in class was the next most notable cause of enjoyment. Namely, five teachers reported the

emotion due to reasons such as successfully giving oral presentations on British and American culture (food), or seeing improvement in students' work (e.g. while reviewing homework assignment on publicity stunts). The remaining causes, such as students' positive feedback, teaching content, and having good rapport with students were reported by two teachers. Only one teacher claimed to have felt enjoyment due to their observing student improvement.

Joy was among the most frequently positive emotions mentioned with a total of 19 teachers reporting it in their accounts and linking it to nine different causes. The teachers primarily admitted feeling joy because of their students' success in class, positive classroom atmosphere, students' positive feedback, and other less conspicuous causes, such as student improvement, having time to do other things in class, teaching content, and others. To start with, the most frequent cause of teacher joy, as reported by five teachers, was *students' success in class*. For example, teachers felt joyful when they saw their students use second conditional sentences properly during translation exercises, or prepare an entire workshop on British culture on their own. When it comes to a *positive classroom atmosphere*, four teachers recalled being joyful when, for instance, observing students' cooperation and satisfaction with the task given (e.g. working on an interesting text), or feeling a good working 'vibe' while introducing new vocabulary. As far as *students' positive feedback* is concerned, two teachers recalled hearing positive comments during the lesson. One of them said that their students responded favorably to the lesson on TV programs which focused on expressing likes and dislikes. Another cause of teacher joy was students' demonstration of knowledge which was introduced by two teachers. This cause can be illustrated by an example involving students that showed creativity, advanced reasoning, and the use of complex vocabulary in their essays.

Another well reported positive emotion was *pride*. According to the results, a total of 18 teachers recounted experiencing the emotion due to six different causes, such as students' performance, demonstration of knowledge, teacher's success in class, having good rapport with students, students' positive feedback, and students' good behavior. The most apparent cause of teacher pride was *students' performance*; moreover, it was mentioned by nine different teachers. One of them said they felt proud when their students successfully recalled and used different verb tenses that they were working on (written grammar exercises). Another teacher felt proud when a special needs student completed a task that required them to sort out countable and uncountable nouns related to food. Regarding *teacher's success in*

class, this particular cause was mentioned by two teachers. One of them felt quite proud knowing that their formal observation class (intended for promotion) had gone well and according to schedule. The least frequent causes of teacher pride involved establishing good rapport with the students, students' positive feedback, as well as their good behavior. All of these were mentioned by a single teacher.

The following positive emotion reported was *enthusiasm*. A total of 14 teachers recalled experiencing it in their classrooms. According to the results, the emotion was instigated by five distinct causes, such as students' positive feedback, students' demonstration of knowledge, students' success in class, positive classroom atmosphere, and discussing students' future. Starting with the most frequent cause of teacher enthusiasm, *students' positive feedback* was disclosed by seven teachers. To briefly illustrate, one of the teachers experienced the emotion after their students revealed how engaging and fun the workshop on British tea time etiquette had been (the students were in charge of it). Another teacher remembered receiving positive feedback on the tasks that were used to revise for the upcoming exam. The next three causes, labeled students' demonstration of knowledge, students' success in class, and positive classroom atmosphere, were equal in their frequency (reported by two teachers). With regards to students' *demonstration of knowledge*, one teacher recounted feeling enthusiastic after witnessing their students proper use of language and participation in pair and group work (on consumerism). When it comes to the *students' success in class*, another teacher remembered experiencing the emotion after seeing that most of their classes had done well on the exam. In terms of *positive classroom atmosphere*, one of the teachers admitted feeling enthusiastic upon hearing students' interesting responses during a warm-up activity (brainstorming vocabulary). *Discussing students' future* was the least frequent cause of teacher enthusiasm as it was mentioned by a single teacher.

Another positive emotion that was equal to enthusiasm in terms of frequency was *relief*. It was mentioned by 14 different teachers and connected to six separate causes, such as students' success in class, accomplishing everything planned on time, end of school year, positive relationship with students, teacher's success at work, and students' demonstration of knowledge. The most frequent cause of the emotion was *students' success in class*, as reported by five teachers. One of them felt relieved that their students had successfully completed their writing task (turning tabloid news into quality newspaper articles). Another teacher recalled feeling relieved when a student that had problems with gerunds and infinitives had done sentence transformation sentences correctly. The following three causes

were all reported by two teachers. When it comes to *accomplishing everything planned on time*, one teacher admitted that they felt relieved after realizing that they had completed the entire syllabus ahead of schedule. Regarding the *end of the school year*, another teacher experienced relief due to the fact that the testing had been completed. In terms of a *positive relationship with the students*, one of the teachers admitted feeling relieved that there was no resentment or hard feelings on the part of their senior students following the final class (announcing final grades). The remaining two causes of teacher relief, labeled teacher's success at work, and students' demonstration of knowledge, were mentioned by a single teacher and were considered least frequent.

Other less common positive emotions experienced by teachers, included the following (in order of frequency): empathy, love and affection, excitement, liking, and eagerness. Among them, *empathy* was reported by 10 teachers and connected to six distinct causes, such as students' private problems (five teachers), student mishaps, conflicted students, students with learning difficulties, teacher being overly strict (all reported by a single teacher). The emotions of *love and affection* were mentioned by seven teachers. The emotions were tied to six causes, for example, students' success in class and good rapport with students (two teachers), seniors leaving, students' positive feedback, and positive classroom atmosphere (each mentioned by a single teacher). *Excitement* and *liking*, as two separate positive emotions, were reported by four teachers. *Excitement* was instigated by three causes, such as teacher's lack of preparation and organization (four teachers), teacher's inability to help students in an accident, and teacher's lack of effort in teaching (all mentioned by a single teacher). *Eagerness* was the least frequently reported positive teacher emotion. It was introduced by a single teacher who stated that they experienced the emotion because they had extra time to do other things in class while observing student teachers.

Negative/Unpleasant Teacher Emotions. As in the section above, the unpleasant emotions and their causes will be presented in order of frequency. The results revealed *frustration* to be the most frequently occurring unpleasant emotion among the teachers. It was reported by 22 teachers and tied to nine separate causes, including students' inappropriate/disruptive behavior, students' lack of interest, effort or preparation, inability to conduct class due to external factors, students' lack of knowledge and understanding, students' negative outcomes, malfunctioning equipment, and overseeing exams. The most prominent cause of teacher frustration, *students' inappropriate/disruptive behavior*, was mentioned by 7 teachers. One of them recalled being frustrated by a misbehaving student that kept disrupting the class

despite the teacher's warnings. Another teacher admitted becoming frustrated when certain students refused to participate in a revision for the final exam. The second most frequent cause of teacher frustration was *students' lack of interest, effort, or preparation*, as revealed by six teachers. One teacher distinctly remembered getting frustrated due to a number of inattentive and inactive students who were unable to master the comparison of adjectives. Another teacher recounted experiencing the same emotion during a class discussion of essays on the final matriculation exam ('matura'). Some students refused to cooperate in the discussion and kept misbehaving. The following two causes were equal in their frequency (both mentioned by two teachers): *inability to conduct classes due to external factors* and *students' lack of knowledge and understanding*. In the case of the former cause, one teacher became frustrated because of the conditions in the classroom during a written examination (it was hot and stuffy). In the case of the latter, the teacher got frustrated after they had heard their students' grammatically incorrect answers while working in pairs (the focus was on the proper use of Present Perfect tense). The remaining causes, which included *grade negotiation*, *students' negative outcomes*, *malfunctioning equipment*, and *overseeing exams*, were the least frequent ones as they were mentioned by a single teacher.

Irritability was the second most frequent unpleasant emotion, reported by 13 teachers. The emotion was linked to five distinct causes: students' lack of effort, motivation, and preparation, students' disruptive/inappropriate behavior, students' lack of knowledge, teacher's inability to conduct classes due to external factors, and teachers' lack of preparation. The most notable of the causes was *students' lack of effort, motivation, and preparation*, which was indicated by six teachers. To illustrate, one teacher became irritated when a group of students forgot to bring their grammar revision assignments to class. Another teacher felt the same emotion when a group of students came unprepared for the previously announced oral examination. With regards to *students' disruptive/inappropriate behavior*, four teachers admitted feeling irritated when their students, for instance, did not pay attention in class (e.g. while watching a movie), or when their senior students exhibited crazy behavior while working on a written assignment (letter of complaint). The remaining causes were equal in frequency as they were introduced by a single teacher.

Disappointment was another conspicuous negative emotion reported by10 teachers. These teachers listed four related causes of this emotion: students' lack of effort, motivation, or preparation, students' disruptive/inappropriate behavior, students' lack of knowledge, and students' lack of empathy. The most frequent cause was *students' lack of effort, motivation, or preparation*, as indicated by four teachers. To briefly exemplify, one of them experienced the emotion when some of their students invested little effort into their writing task (writing an introductory paragraph of an essay). Another teacher recalled feeling disappointed during the final class when they were required to announce the grades. Namely, she felt that the students had little awareness of why it is important to study regularly throughout the school year. The second most frequent cause, labeled *students' disruptive/inappropriate behavior*, was reported by three teachers. According to one teacher, they felt disappointed because a group of students refused to behave while their peers held oral presentations. Another example showed a teacher that was disappointed by a student that tried to trick them during test correction. The student attempted to mislead the teacher into believing they had crossed the correct answer. Students' *lack of knowledge* (as indicated by two teachers) and students' *lack of empathy* (one teacher) were the least frequent causes of teacher disappointment.

Sadness was another unpleasant emotion which was reported by nine teachers.). When it comes to the causes that initiated the emotion, the teachers in this study listed six of them: teacher's lack of preparation, students leaving school, students' disruptive/inappropriate behavior, students not living up to their potential, students' success, and students' unfortunate predicaments. For example, *teacher's lack of preparation* was the most prominent cause of sadness and was mentioned by three teachers. These teachers recalled feeling sad due to reasons such as having an unstructured lesson with gaps that led to student misbehavior (implying that the teacher should have prepared better), or not preparing the tests on time which, according to one of the teachers, put the students in a difficult situation in which they had less time to complete all the tasks. The second most noted cause of teacher sadness was teacher's awareness of *students leaving school*. To clarify, two teachers admitted feeling sad because their senior students were about to leave school and start facing new challenges in life. While one of them initiated a class-wide discussion on the topic, the other simply ruminated the idea while analyzing the work done in the past four years. The remaining causes of teacher sadness were reported by a single teacher.

Two negative emotions, namely anger and boredom, were reported by eight teachers. Teachers in this study asserted the following four causes of their *anger*: students' disruptive/inappropriate behavior, students' lack of preparation, motivation, or effort, students' negative outcome, and students questioning the teacher's competence. The most conspicuous of the causes was *students' disruptive/inappropriate behavior*. Namely, four teachers recounted feeling angry at their students in various situations. For instance, one teacher felt angry at a student who attempted to use her phone during the exam. Another teacher experienced the same emotion during an oral exam. While one of the students was taking the exam, the rest of the class was engaged in idle conversation which disrupted the working atmosphere in the classroom. The second most frequent cause of teacher anger was *students' lack of preparation, motivation, or effort*. To illustrate, the cause was noted by two teachers whose anger was directed at lower proficiency level students whose grades were below average and who had yet to pass the course. The students in question showed little regard for their lack of success, as well as the teacher's attempts to help them. The remaining two causes, *students' negative outcome*, and *students questioning teacher's competence*, were mentioned by one teacher only.

When it comes to teacher *boredom*, three separate causes were tied to the emotion, including overseeing the exams, repetition of the teaching content, and revising for a test. To start with the most notable one, *overseeing the exams* caused boredom among four teachers. When asked about it, one of them said that monitoring the students during a written examination was tedious and exhausting because there was nothing for them to do. Another teacher concurred in their assessment and added that in such cases teachers rarely intervene as students are already acquainted with the procedure of testing. The second most frequent cause of boredom, *repetition of the teaching content*, was mentioned by three teachers. While one teacher recalled going over the same exercises related to revising the present perfect tense, another teacher complained about the same exercises in the workbook which even students disliked. The two other causes of boredom were reported by a single teacher.

The remaining eight negative emotions mentioned by teachers in this study were the least frequent. In brief, powerlessness was reported by seven teachers, guilt by six, anxiety by five, shame by two, and fear, self-doubt, tension/straining, and dissatisfaction by one teacher. The first three will be more concisely illustrated. Starting with *powerlessness*, the teachers in this study tied it to a total of five distinct causes: students' lack of preparation, motivation, or effort, the teacher's inability to control students, teachers' inability to help a student in an

accident, student pressure, and students' poor success. The first most frequent cause of this emotion, *students' lack of preparation, motivation, or effort*, was mentioned by three teachers. Each of the remaining causes was mentioned by a single teacher. To illustrate the first cause, one teacher felt powerless while their students, whom the teacher described as lazy and unmotivated, were working on a text. The teacher experienced the emotion because it seemed that nothing could be done to reach the students and animate them. Another teacher remarked that they felt powerless when they witnessed lack of motivation and ambition among their students while putting in grades in the class register. *Guilt* was one of the more interesting unpleasant emotions reported in this study. Namely, a total of six teachers admitted to having felt guilty in class and they connected the emotion to three separate causes: teacher's lack of preparation and organization, inability to help a student in an accident, and teacher's lack of teaching effort. Only the first cause will be illustrated as it was reported by four teachers, unlike the other two which were mentioned by only one teacher. *Teacher's lack of preparation and organization* reflected negatively on their students, as well as their class. For example, many teachers in the study claimed that their inability to prepare the tasks/tests on time resulted in their students having less time to complete them. Some of them also recalled the lesson being less structured due to the same cause.

Lastly, *anxiety* was a commonly occurring negative emotion among some of the teachers. In this study, a total of five teachers recounted feeling anxious in their classrooms. When asked what had instigated the emotion, they recollected four individual causes: *organizational issues, students' lack of preparation, motivation, or effort, numerous obligations,* and *students' disruptive/inappropriate behavior*. Two teachers listed the *organizational issues* as cause of their anxiety, while the remaining causes were addressed by a single teacher. To exemplify the first category, one teacher said that they felt anxious because they were not sure if the workshop that the students had been working on would be completed successfully (anxiety related to outcome). The second teacher's anxiety was not related to classroom activities, but to the issues with organizing a school trip.

4.1.2. Classroom Activities

The teacher diaries also investigated how teachers' emotions and their causes were related to different classroom activities. Classroom activities will be discussed within the context of positive/pleasant and negative/unpleasant emotions. Specifically, the activities will be portrayed in terms of their frequency of occurrence and their relation to various positive/negative emotions. The least frequent activities will only be named.

Classroom Activities Related to Positive/Pleasant Emotions. The most frequently listed activities related to positive emotions were tied to grammar. *Grammatical activities* encompassed exercises, such as filling in the gaps with appropriate tenses, comparison of adjectives (e.g. comparing people), reported speech (reporting on what someone did), grammar revision tasks (before the exam), and others. Grammar-based activities were reported 29 times in connection to several distinct positive emotions, such as satisfaction, enjoyment, joy, pride, enthusiasm, love and affection, and liking. To exemplify, three teachers were satisfied knowing how much their learners had acquired (e.g. using grammatical rules properly), one experienced enjoyment owing to a learners' improvement (e.g. observing the learner's book report presentation) , and five teachers reported feeling joyful after witnessing their learners' success in class (e.g. translating 2nd conditional sentences from Croatian to English). The second most frequently mentioned activity involved *speaking activities* that involved class discussions, telling stories, verbal games, giving oral reports, and others. These types of activities were reported 27 times by different teachers and connected to a host of positive emotions, some of which involve satisfaction, enjoyment, pride, enthusiasm, empathy, love and affection. Given the variety of speaking activities, a small portion will be exemplified and tied to some of the emotions listed. Many teachers in this study recalled feeling satisfaction after observing their learners' proper use of language and their show of interest in given topics (e.g. dangerous situations), pride in their abilities (e.g. ability to organize a workshop independently), and empathy toward students who mentioned having family problems during one of class discussions.

Reading, or text-related, *activities* were the next in line of frequency. Such activities were comprised of reading comprehension tasks, analyzing different text genres, matching paragraphs with titles, scanning for specific phrases, and so on. Namely, activities belonging to this group were mentioned a total of 13 times and related to emotions such as satisfaction, enjoyment, pride, enthusiasm, relief, excitement, and liking. When asked about the classroom

experiences and activities they were involved in, the teachers admitted feeling satisfaction after receiving positive student feedback on the topic of the text or using new vocabulary, pride following a successfully conducted formal observation class where students had worked on reading assignments within groups, enthusiasm when realizing how much interest the students had in a given topic and the desire to want to learn more about it, and relief that the students had completed the reading tasks successfully on their own. Activities pertaining to vocabulary closely followed those related to reading and were referred to a total of 12 times in this study. *Vocabulary-related activities* encompassed introducing new vocabulary at the beginning of the class, brainstorming, using specific phrases and expressions (e.g. expressing likes and dislikes), vocabulary practice, word games, and others. These activities were linked to positive emotions such as satisfaction, enjoyment, joy, enthusiasm, empathy, excitement, and liking. For example, some of the teachers were satisfied with how much vocabulary their students were able to retain and use in speaking activities, some enjoyed seeing how interested and animated the students were during a brainstorming activity (vocabulary warm-up task), some were empathetic toward students with health issues (e.g. a student whose asthma attack made them unable to do vocabulary consolidation tasks), while others were excited about taking part in a class-wide guessing game which both the teacher and students enjoyed.

The following two types of classroom activities, namely oral exams and student projects/workshops, were mentioned eight times by different teachers and tied to various positive emotions. Namely *oral exams* involved students coming to the front of the class to be evaluated. The students were required to demonstrate their knowledge, as well as their speaking abilities. The teachers associated this classroom activity with emotions such as satisfaction, joy, pride, relief, empathy, love and affection. To illustrate, some teachers felt joyful, proud, and relieved at the same time when their (usually poor) students came prepared for the final oral examination. The uncertainty of whether the students would pass was the factor that contributed to the teachers' emotional state. When it comes to *student projects and workshops*, it should be indicated that they usually incorporated different types of activities and language skills. Furthermore, some examples involved projects on British and American food (student presentations), British culture and speaking, taking photographs and making short films that would later be presented to other students and teachers, as well as other activities. The teachers related these activities to emotions such as joy, pride, enthusiasm, and empathy. For instance, some teachers experienced joy as a result of their students' success in

preparing and executing the British culture workshop, some felt pride upon seeing how their students presented their work in front of other students and teachers, some experienced enthusiasm after observing all the fun the students had while preparing the British tea time etiquette workshop, while others felt empathy when the students that participated in the English project got in trouble with another teacher (who marked them down as absent without realizing they had already been working with their colleague). The least frequently mentioned activities included exam analysis, and class observation (each mentioned five times), while activities pertaining to content revision were noted four times. *Exam* or *test analysis* was tied to several positive emotions, such as satisfaction, joy, and enthusiasm, while class observation was linked to satisfaction, joy, relief, and eagerness. As far as revision activities were concerned, the teachers tied them to satisfaction, enjoyment, and joy.

Classroom Activities Related to Negative/Unpleasant Emotions. When it comes to the unpleasant emotions, the teachers in this study associated a number of classroom activities with them. Similar to the previous section, the most frequently listed activities were *grammatical activities* which were mentioned a total of 19 times by different teachers. These activities were linked to emotions such as frustration, disappointment, sadness, irritability, anger, boredom, anxiety, guilt, shame, dissatisfaction, and self-doubt. Given the abundance of negative emotions in this case, only a portion will be illustrated. For instance, some teachers in this study recounted experiencing frustration while explaining comparison of adjectives to students that were inattentive, inactive, and who showed no interest in learning the subject matter. Teachers also felt disappointment after observing the students' misbehavior and refusal to acknowledge the teacher's warnings during their work on grammatical tasks, sadness after realizing that they could have prepared better for the lesson to avoid certain mishaps and student misbehavior, as well as boredom owing to the same boring grammar exercises in students' workbooks they (the teacher and students) had to go through.

In terms of the second most frequently reported activities related to unpleasant emotions, the results pointed to two types, namely *speaking activities* and *testing*. Both were mentioned a total of 11 times by the teachers. *Speaking activities* were connected to numerous negative emotions, such as frustration, disappointment, irritability, anxiety, and fatigue. For example, numerous teachers recounted experiencing unpleasant emotions, such as frustration, disappointment, irritation, and anxiety, and they connected them to different causes. Namely, many teachers felt frustrated and disappointed when disruptive learners refused to pay attention to their peers' presentations. Some teachers felt irritated as a result of

learners' lack of knowledge (not knowing how to use the 3rd person singular of Present Simple during oral presentation in Grammar school), and anxious after becoming aware of their learners' complete lack of enthusiasm for finishing the school year properly. With regards to *testing*, the teachers reported having experienced emotions such as frustration, sadness, anger, boredom, powerlessness, and guilt. To illustrate, some teachers felt sad because of their learners' poor grades (e.g. while the learners were taking their final test, the teacher was going over the grades). Furthermore, some teachers also mentioned experiencing anger because of learners who tried to cheat (e.g. by using their mobile phone), powerlessness, which was instigated by a general lack of appreciation, motivation, and effort for learning English (e.g. in this case among young learners (grades 1-4). Several teachers felt guilty because of their lack of preparation (e.g. they did not prepare the tests on time and the students were unable to complete all the tasks before the next class).

The following two types of activities, labeled *oral exams* and *revision activities*, were also equal in their frequency of occurrence; namely, both types of activities were mentioned nine times in the study. To elaborate, *oral exams* were linked to different unpleasant emotions, such as frustration, disappointment, irritability, anger, and powerlessness. For instance, two teachers reported feeling frustrated when several of their poor learners came for their oral examination unprepared and uninterested, while one teacher was disappointed when they observed a learner's attitude toward her academic success (the learner came for an oral exam not caring whether she passed or failed). Another teacher reported being angry when a group of learners came unprepared despite the fact that their oral exam was previously announced. One teacher felt powerless when they were not able to accommodate numerous requests sent by poor students and their parents to correct bad grades. With regards to *revision activities*, the teachers associated them with emotions such as frustration, sadness, irritability, boredom, anxiety, guilt, shame, hostility, and self-doubt. Considering the number of unpleasant emotions listed, the more intriguing ones will be exemplified. The teachers in this study reported feeling anxious when a disruptive student (who apparently suffered from ADHD) swore in front of the class while his peers were presenting some interesting activities that they had prepared. The teachers also mentioned experiencing guilt which was caused by the teacher's inability to prepare all the revision materials on time, as well as lack of time for students to complete the tasks.

Hostility and shame were also mentioned and those emotions were related to the fact that teachers did not remain composed when they were confronted with disruptive students (who were impersonating monkey noises). The teachers mentioned having self-doubt after realizing that their lack of concentration resulted in making an incomplete test which lacked certain tasks.

The upcoming types of activities, *writing activities*, *exam analysis*, and *entering grades into the class register* were all mentioned a total of six times. *Writing activities*, which comprised of activities such as writing letters of complaint, pros and cons essays, news articles, book reports, and others, were tied to several unpleasant emotions, such as frustration, disappointment, and irritability. For example, one teacher felt frustrated by the behavior shown by their senior students while they practiced writing a letter of complaint, another was disappointed seeing how their students invested little effort into writing an introductory paragraph of an essay, while still another teacher was irritated by a lack of motivation among students while working on a writing task (turning tabloid news into quality newspaper article). As far as *exam analysis* was concerned, the teachers associated it with frustration, disappointment, and anger. To elucidate, one teacher reported being frustrated by students' reactions during test analysis (e.g. one student lied to the teacher about their score), while another felt disappointed by one student's dishonest conduct in midst of a test correction (the student lied about the teacher crossing out the 'correct answer' which was not the case). A different teacher reported being angry because of a student's misbehavior that occurred during a test analysis and during other classes. Lastly, the process of teacher *entering grades* was connected to unpleasant emotions such as frustration, sadness, and powerlessness. To illustrate, the teachers' recounts revealed that some of them were frustrated by their inability to control a student's improper behavior in front of them while entering the grades into the class register, other teachers or another teacher ? felt sad realizing that their students would soon be leaving school and starting new adventures, while another felt powerless because of their students' below average grades and their (teachers') inability to spark motivation among them. The remaining classroom activities, *student projects/workshops* (mentioned 4 times and associated with sadness, anxiety, powerlessness, and guilt), *reading activities* (mentioned 3 times and linked to anger and powerlessness), *vocabulary activities* and *classroom observation* (both mentioned 2 times and tied to frustration, irritability, tension, and self-doubt) were the least frequently mentioned classroom activities pertaining to unpleasant emotions.

4.1.3. Emotion Regulation Strategies

The following sub-section will discuss diverse emotion regulation strategies with regards to their ties to positive and negative emotions, their respective causes, and specific classroom activities. The strategies will be presented in order of their frequency and relationship to a specific group of emotions (positive/negative).

Positive Emotions. According to the results, the teachers reported a total of seven different types of emotion regulation strategies related to positive emotions they experienced in the classroom: down-regulation, real display of emotions, suppression, talking to a colleague, thinking about something else, up-regulation, and observing a situation from a different perspective. Once the emotion regulation strategies have been portrayed individually, they will be connected to a theoretical framework in the discussion section. Furthermore, the results also revealed a less frequent use of emotion regulation strategies when it comes to their experience with positive emotions in the classroom, as will soon become apparent. To start with the most frequent example, the teachers admitted down-regulating their positive emotions on seven different occasions.

Down-regulation was noted in connection to emotions such as satisfaction, joy, enthusiasm, and empathy. It should be noted, however, that down-regulation is a form of suppression since they both denote a decrease in the duration and magnitude of the emotion. To illustrate, one teacher clearly remembered feeling satisfied with the fact that they had additional time to do other things during a class observation (while a teacher in training was teaching, the respondent did other tasks). Hoping to preserve a professional demeanor, the teacher in question down-regulated the emotion and chose not to show it in class. Another teacher reported a similar situation in which they down-regulated their joy during a class observation that had several teachers in training. Their reasoning for opting for that method matched the one from the first example. One more instance of down-regulation of emotions was observed with a teacher that experienced empathy toward the learners who suffered because they had not prepared the tests on time. The teacher chose to reduce the intensity of the emotion by remaining calm and assuring students they would have time to finish next time.

The second most frequent way of dealing with emotions was open display. *Showing real emotions* was reported four times in this study and it was associated with satisfaction, enjoyment, and enthusiasm. This strategy bears resemblance to the Naturally Felt Emotions strategy that is part of the Teacher Emotional Labor Strategy Scale adapted by Yin (2014). In essence, it refers to the teacher who experiences and openly displays genuine and classroom-appropriate emotions at the same time. To exemplify, one of the teachers recalled a lesson in which they were brainstorming words as an introduction to teaching new vocabulary. The students' responses were quite positive as they made the teacher feel satisfied and enthusiastic. This could be discerned from his encouraging words to students (e.g. great job). A different teacher recollected experiencing enjoyment as they were watching their students' presentations. They also showed their emotions openly by praising their students' effort and speaking abilities in front of everyone.

The following four types of emotion regulation strategies, namely suppression, talking to a colleague, thinking about something else, and up-regulation, were equal in terms of their frequency; moreover, all of them were mentioned three times by different teachers. Starting with *suppression*, one teacher remembered being satisfied with their students' exam results (exam analysis) and chose to keep the emotion to himself, rather than reveal it to the class. Another teacher felt joyful seeing their students hard at work during a revision for the exam. Though the emotion was evoked by simply looking at the students' faces, the teacher chose to keep it hidden. When it comes to enthusiasm, one teacher felt the emotion while introducing students to new vocabulary when the students showed an interest in the subject matter; however, the emotion was never shown.

As far as *talking to a colleague* is concerned, this example was linked to enjoyment, pride, and relief. Though talking to a colleague might not constitute an emotion regulation strategy per se, it is still valid as it is related to emotion regulation goals, i.e. up-regulation. By sharing positive news with someone else, the teachers aimed to increase the intensity and the length of the pleasant emotions experienced. For example, one of the teachers claimed to have enjoyed hearing their students' personal stories in class. It also made the teacher proud. Namely, the students showed creativity in their presentation and the teacher decided to share it with a colleague from school. Another instance of this strategy in use was noted by a teacher that experienced relief when a student who was having problems finally grasped conditional sentences. The teacher was relieved to see the improvement and chose to share it with a colleague.

Thinking about something else is a common strategy employed by teachers. In the case of this study, the strategy was connected to the emotions of joy and relief. To illustrate, one teacher recalled experiencing frustration due to their learners' lack of effort and preparation for the oral examination. The learners' negative grades added up to the affective experience, so the teacher opted to think about the upcoming holiday season to alleviate the frustration. This example could be interpreted as the use of the attentional deployment strategy, as described by Gross (2014). Another teacher's joy was evoked by an interesting lesson topic (London). This made the teacher start thinking about taking a trip there in the near future. A somewhat different example includes a teacher that felt relieved that the testing was almost over. As a result, the teacher started thinking about possible plans and activities for the weekend. Though feeling relieved indicates the end of a possibly tense period, the teacher may have experienced other emotions (such as stress) that they did not reveal.

With regards to up-regulation, several teachers admitted purposely prolonging the intensity of their positive emotions. Specifically, *up-regulation* was tied to pride, empathy, and love and affection. To start with, one of the teachers up-regulated the feeling of pride, as well as love and affection, while watching their students' public presentations during School day. What facilitated the process further was the fact that the students' class master, who is considered strict, openly showed their love for them. In terms of empathy, another teacher claimed to have intensified the emotion because of a predicament that put one of their colleagues, as well as a group of students, in an awkward position. While the English teacher was carrying out a project with the students, another teacher marked them down as absent from his class (without realizing they were partaking in the project). The respondent claimed to have showed additional empathy toward the students, as well as their colleague. The remaining and least frequent strategy used, labeled *viewing the situation from a different perspective*, was only tied to empathy. This is a clear example of reappraisal, as can be observed in Gross's (2014) taxonomy.

Negative Emotions. Unlike the previous section, more emotion regulation strategies were reported in connection to negative emotions. A total of 13 types of strategies were observed in attempt to regulate various unpleasant emotions, such as disappointment, frustration, anger, and other. The most commonly occurring ones will be discussed in the upcoming sections, while the least frequent ones will solely be listed. To begin with, *viewing the situation from a different perspective* was the most frequently used strategy for regulating negative emotions among the teachers in this study. This is interesting considering that the

same strategy was one of the least frequently used strategies in the case of positive emotions. The strategy in question was mentioned fourteen times and teachers admitted using it to regulate unpleasant emotions, such as frustration, disappointment, sadness, irritability, powerlessness, and guilt. To illustrate, one teacher said that they experienced disappointment with their student' lackluster speaking skills during an oral exam. To alleviate this emotion, they told themselves that the same students must be better at other subjects, perhaps vocational ones. Another interesting example was connected to a teacher that felt sad having observed a lack of learning habits among learners, as well as a lack of effort during a final exam revision class. The teacher confronted the emotion by reminding themselves that their students were in their first year and that they had three more years to do better. A somewhat similar example was reported by a teacher who teaches English to young learners. Namely, they felt powerless during a final examination seeing how their learners showed little regard for learning and grades in general (especially being that young). The teacher then tried to remember that those students had different lives, value systems, and family relations (being members of Roma minority), and felt they should not be judgmental because of it.

The second most prominent strategy for regulating unpleasant emotions in the classroom was *taking deep breaths*. This strategy was mentioned 13 times by various teachers and it can be placed under the response modulation category, according to Gross (2014). The teachers recalled attempting to breathe deeply when they were confronted with frustration, disappointment, irritability, anger, anxiety, powerlessness, and guilt. To exemplify, one of the teachers felt frustrated when they saw their students not paying attention and not performing their tasks (comparison of adjectives). The teachers recalled trying to breathe deeply and count to ten so the emotion would dissipate. A similar case was reported by a different teacher that experienced disappointment and anger caused by a group of rowdy students that kept interfering with the class (while working on grammatical exercises) and ignoring the teacher's warnings. Hoping to reduce the intensity of their emotions, the teacher resorted to the same two strategies, namely counting to ten and breathing deeply. The following example differs in terms of the situation and it shows a teacher that felt guilty because of a student mishap during a workshop on British culture. The teacher started breathing deeply knowing there was nothing they could do to help.

Down-regulation was another common way of dealing with unpleasant emotions in the classroom. The strategy was mentioned a total of seven times in this study and teachers remembered using it in an attempt to lessen the intensity of emotions such as sadness, irritability, guilt, and tension. Starting with sadness, one teacher recalled feeling sad as a result of a student's rude behavior during class observations a (teacher in training was holding a lesson). The teacher down-regulated the emotion by remaining calm and professional in front of the students. A different teacher mentioned reducing the intensity of their irritability during a book report activity (retelling); namely, the emotion was caused by a visibly clueless student that refused to admit their lack of interest. The teacher tried to resolve this predicament by remaining calm and also by trying to appreciate the good moments they had with the student (which counts as another strategy). As far as guilt is concerned, one of the teachers experienced the emotion as a result of coming ill-prepared to the final exam (the teacher did not prepare the tests on time and the students had to finish them earlier). Hoping to combat their guilt, the teacher remembered trying to remain calm and help the students get past their frustration.

Two types of strategies, labeled *suppression* and *talking to someone*, were both reported five times by different teachers. They were linked to the following negative emotions: frustration, disappointment, sadness, anger, and guilt. With regards to *suppression*, one teacher remembered a class where students were giving their presentations in front of the class when a group of students started interfering. The teacher became frustrated and disappointed, but attempted to get around the emotional episode by containing the emotions and not showing them to the students, and by using humor. Another teacher experienced irritability while doing a writing task with their students (e.g. turning tabloid news into genuine newspaper articles). The students' obvious absence of motivation was the instigator of the emotion, but the teacher showed self-control. In other words, they did not want to show their irritability in front of the class. A different teacher felt guilty because they came to class without having prepared all the materials (the students were working on their tasks during a revision class and the teacher realized that a part of the exam was missing). Despite their inner guilt, the teacher did their best to remain calm and continued to explain the situation to their students in order to avoid upsetting the students. *Talking to someone* is another way of processing unpleasant emotion. To start with, one teacher reported feeling frustrated by a student that had lied to them during a test analysis. The teacher remedied the episode by confronting that student and talking about their behavior and obligations. Another case that

closely resembles this one involved a teacher that was disappointed by a student's lack of will, motivation, and interest to change their current predicament (bad grades) during an oral exam. The teacher in question chose to address the situation and their emotion by discussing it with the student and their class master. The final example in this section concerns a teacher that experienced anger toward a student with special requests regarding the correction of their poor grades. It should be noted that the student in question had not worked the entire year. To control their anger, the teacher decided to consult with a colleague from school and ask for advice. This particular case is an example of venting, which is a form of response that allows a person to pour out whatever is troubling them to someone they know. This type of regulation would coincide with Gross's (2014) modulation response strategies.

The following examples of emotion regulation strategies were the least frequently used and were mentioned by a handful of teachers. To illustrate, two strategies, namely *counting to ten* and *speaking loudly* and *warning students*, were equal in terms of their frequency (both mentioned four times). The strategies listed belong the situation modification group, according to Gross (2014). While the counting strategy was used to regulate teachers' frustration, disappointment, irritability and anger, loud speech and warnings were used to control sadness, anxiety, guilt, and dissatisfaction. Similarly, *thinking about something else* and *changing the approach/doing something else* were also tied in their occurrence as both were mentioned three times. These examples could be classified as attentional deployment since they involve altering one's attention or focus in a given situation so as to influence one's emotions. The first strategy was utilized when teachers wanted to deal with their frustration, irritability and anxiety, while the latter was used to deal with boredom, powerlessness, and self-doubt. Two teachers reported *trying to remain positive* (e.g. using humor) to regulate their frustration. This would be a clear case of one type of cognitive change, i.e. reappraisal because it involves the effort to modify how one perceives a given situation, all with the aim of changing its emotional impact (Gross, 2014). The last three types of strategies, labeled up-regulation, listening to music, and offering explanations to students, were mentioned by a single teacher. The strategies mentioned were used by teachers to regulate their irritability, anxiety, and shame.

4.1.4. Ideal Teacher Self Images

The images of ideal teacher self and teaching self-efficacy were analyzed separately from the respondents' emotions, causes of emotions, classroom activities, and emotion regulation strategies. These images were associated with positive and negative emotions; moreover, both types of emotions affected the teachers' motivation and the creation of distinct ideal future teacher self-images. 'In other words, teachers in the study presented different images of their ideal selves which were associated with various emotions experienced in the classroom. The qualitative analysis revealed numerous ideal teacher self-concepts which were summarized under eight broad categories by order of frequency of occurrence. These categories are as follows: 1) The Evolving Teacher; 2) The Successful Teacher; 3) The Competent Teacher; 4) The Motivated and Motivating Teacher; 5) The Positive and Optimistic Teacher; 6) The Emotionally Intelligent Teacher; 7) The Confident Teacher; 8) The Pessimistic Teacher.

1) The Evolving Teacher

This category encompassed various images related to teachers' attempts at improving themselves both personally and professionally; moreover, the concept of the evolving teacher implies improving one's teaching methods, (re)evaluating one's methods of managing the classroom, and others. The teachers' ideal teacher self-images presented below were precipitated by the following emotions: joy, pride, enthusiasm, relief, empathy, sadness, anxiety, powerlessness and guilt.

The image of a teacher who wants to develop as a teacher and as an individual was connected with several emotions, including satisfaction, joy, enthusiasm, relief, empathy, sadness, anxiety, and powerlessness. In terms of positive emotions, one teacher experienced satisfaction and joy while observing student teachers who used some interesting activities with the students. That motivated the teacher to re-evaluate and refresh their own teaching strategies. Another teacher experienced joy after witnessing the successful completion of a student workshop on British culture. The emotion was caused by the fact that their students were able to organize and carry out the workshop on their own, despite having experienced minor setbacks.

Another teacher reported feeling enthusiastic and proud because their students demonstrated a good mastery of English during an oral activity and they also provided positive feedback on the text they were working on. The positive emotions mentioned enhanced the teacher's future teacher self-image in a way they felt encouraged to keep investing effort in their work. Two teachers reported experiencing relief which influenced their future teacher self- images. One of them recalled being worried about how a student-held workshop on British tea etiquette would turn out (there were some organizational issues). Seeing that the students did everything well, the teacher felt relieved and motivated to improve on their teaching and organizing skills. The other teacher felt relief after successfully concluding a PTA meeting. Though not classroom related, the teacher expressed the desire to keep improving their organizational and administrative skills. Empathy was another reported emotion and it was experienced by three teachers. One of them experienced the emotion after a PTA meeting when they had spoken to a parent whose child was going through a difficult situation. This made the teacher want to change themselves and some aspects of teaching so they could benefit the said student, as well as other students in the future. Another teacher empathized with the student who had had an accident during a workshop on British culture and speaking. This affected the teacher in a way that made them want to improve as a teacher and avoid this type of mishap next time. The third teacher felt empathy toward their students after being harsh with them for not preparing enough for class. The emotion occurred while the students were doing group work and the teacher was grading their essays. As a result of this situation, the teacher stated they were willing to learn from this and change.

The image of the evolving teacher was also tied to negative emotions. For instance, the teachers in the study associated the image with sadness, irritability, anxiety, and powerlessness. In the case of *sadness*, one teacher reported experiencing the emotion after a badly prepared class (dealing with Present Perfect Simple tense) which resulted in student misbehavior. Realizing they could have prepared better and worked harder to keep their students busy and to manage their class more effectively, the teacher expressed the desire to develop their classroom management skills. In a somewhat similar case, one teacher felt *irritated* by the end-result of the envisioned class involving group work. The teacher had not prepared what they were supposed to do and that affected the students' work negatively – there was not enough time to complete the tasks and the teacher kept rushing them. When asked about their future self-image, they replied that they saw themselves as a teacher who was ready to learn and change, in other words, improve their teaching methods in the future..

Anxiety was another negative emotion reported in this study. One teacher felt anxious when one of the students (that was reportedly suffering from ADHD) started disrupting the class held by his classmates who had prepared interesting revision tasks for the entire class. The situation was tense as the teacher kept chastising the misbehaving student and rushing the rest of the group. They admitted they needed to change and improve on the way they perceived things in class.

Another interesting emotion connected with the self-evolving teacher image was the feeling of *powerlessness*. For instance, one teacher felt incapable of engaging lazy students while working on a text. The teacher in question tried to remain calm and use different techniques but to no avail. Although feeling ineffective at the moment, the teacher reported that, in the future, they would strive to improve their teaching methods and hopefully be able to improve student motivation. Another respondent experienced guilt for not investing enough effort in explaining grammar to their students. The teacher realized that continuing in such a manner might create problems in the future, so they were determined to improve their teaching skills in the future. Guilt was also reported by the previously mentioned teacher whose unstructured class (on Present Perfect Simple) led to student misbehavior. The teacher felt guilty for not being adequately prepared, which resulted in their re-evaluation of their teaching and discipline methods.

2) The Successful Teacher

The image of a successful teacher was the second most prominent among the teachers in this study and it was associated with different positive emotions, such as satisfaction, joy, pride, relief, love and affection, as well as negative emotions, including frustration, disappointment, and anger. A prominent positive emotion experienced by teachers was *satisfaction*. For instance, one teacher claimed to have experienced it during grammar revision class (the students were practicing for an upcoming exam). The students' display of knowledge (getting most answers right) triggered the said emotion and that affected the teacher's future teacher self-image – they reported they could see themselves as a successful teacher. Another teacher reported feeling satisfied after seeing that most classes had achieved good results in the final exam. The teacher in question was also encouraged by this and said they could see themselves as a successful teacher in the future.

A different teacher recalled a similar situation with their fifth graders who had earned relatively good grades in their final test. That made the teacher feel joyful and it reflected positively on their future teacher self-image. In terms of pride, one teacher recalled being proud of their students' (seniors) behavior during an exam analysis. The teacher was reporting the exam results to the students and they behaved well. Such behavior reinforced the future self-image of a successful teacher. Another positive emotion reported was *relief* and it involved two teachers in the study. One teacher recalled doing sentence transformation tasks with their students (gerunds and infinitives). The teacher anticipated some trouble with the subject matter however the students reacted positively and were able to do the tasks. This made the teacher feel relieved and it led to a positive future self-image of a successful teacher. The other teacher felt relieved after realizing they had completed the syllabus successfully. Everything planned was covered and that facilitated their future teacher self-image of a successful educator. Another teacher admitted feeling love and affection toward their students during test revision class. The class was focused on revising grammar and the students' positive feedback (expressing gratitude to the teacher) for learning something new caused the emotion and affected the respondent's future self-image of a successful teacher. According to the teacher, there will always be students who will appreciate and benefit from their teaching techniques.

Regarding negative emotions, the following were associated with the image of successful teacher: frustration, disappointment, and anger. As far as *frustration* is concerned, two teachers mentioned feeling frustrated in class. To illustrate, one teacher was frustrated during the final exam revision class by students who refused to participate and showed little regard for their success. Though this was a negative situation, the teacher still saw themselves as successful because they knew that they had done their best and there was nothing else to be done. The other respondent felt frustrated by the students' inability to understand the usage of future forms. When asked about their future self-image after class, the teacher said that they could still see themselves as a successful teacher because they invested additional effort to explain the rules to students.

With respect to *disappointment*, two teachers felt disappointed by their students' behavior and attitude toward their obligations. Specifically, one teacher's disappointment was caused by a student's attempt to trick him into believing they had miscalculated the final score on a test and, consequently, were given lesser grade (which was not the case). Despite the incident, the teacher still saw themselves as confident and successful because they knew

they had done their job fairly. The other example involved a teacher who was disappointed by their student's lack of will, motivation and interest to change their predicament. The teacher in question did their best to find out what the issue was and attempted to rectify it. That reflected positively on their future self-image (successful teacher) despite the negative emotion experienced. Another interesting negative emotion was *anger* and it affected two of the respondents. One of them recalled feeling angry with their fourth graders for getting bad grades on the final exam despite thorough preparation (specifically focusing on grammar). When asked about their ideal teacher self-image, the respondent said they saw themselves as a successful teacher knowing that they had done more than they could have to help the students make progress. The other respondent got angry with their misbehaving students who were supposed to be doing individual tasks while the teacher was engaged in oral examinations. The negative situation had some impact on the teacher's future self-image, however the respondent claimed they could still imagine themselves as successful provided that they came prepared for their class.

3) The Competent Teacher

This category encompassed different future teacher self-images related to teachers' competence in general, as well as certain teaching skills, such as knowing how to construct valid and objective tests. The image of the competent teacher was tied to the following emotions: satisfaction, enjoyment, pride, empathy, frustration, sadness, guilt, and boredom. The image of a competent and skilled teacher was linked to several positive emotions, such as satisfaction, enjoyment, pride, and empathy. In terms of *satisfaction*, one teacher recalled feeling satisfied with their students' knowledge (practicing giving advice and using the phrases in sentences) and their trust in the teacher. The same teacher also reported experiencing pride and enjoyment. These positive emotions contributed positively to their future teacher self-image of a competent teacher and the teacher felt motivated to keep working on developing appropriate tasks for their students.

Another teacher felt satisfied during the show and tell presentation. Their students' speaking abilities were developed and it impacted the teacher's ideal self-image positively – they saw themselves as a competent teacher who can inspire their students. *Empathy* was among the more compelling emotions experienced in the classroom. One teacher, for instance, experienced it toward their students who suffered because of the teacher's lack of preparation. The teacher did not prepare the test on time which resulted in their students

having less time to take it. This situation did not affect the teacher's future self-image greatly however they did feel there was room for improvement (e.g. developing time management skills).

In addition to the positive emotions experienced which were associated with the image of competent teacher, the teachers also felt negative emotions, such as frustration, sadness, guilt, and boredom. *Frustration*, for example, was experienced by two respondents. To illustrate, one of them recollected being frustrated by a recurring classroom management issue (e.g. students who would forget where they were supposed to sit). The issue mentioned caused some students to misbehave which annoyed the teacher. However, this occurrence did not have an impact on the teacher's self-concept, that is, they still believed they were quite competent and felt motivated. The other example denoted a teacher who saw themselves as competent but in need of developing skills related to administering tests (giving shorter tests). The teacher's attitude and frustration were triggered by the unfavorable conditions in the classroom (hot and stuffy) while the students were taking their exam.

The following example reveals the previously mentioned teacher who, besides experiencing empathy, also felt sad and guilty for not preparing the test on time. The teacher remembered attempting to remain calm in hopes of alleviating their students' frustration. When asked about their future teacher self-image, they saw themselves as competent teacher who would need to hone their organization and time-management skills. The final example in this section pertained to classroom boredom which was instigated by uninteresting and repetitive action (monitoring students while taking test). The teacher felt bored as there was nothing for them to do. This affected their future teacher self-image in terms of feeling competent but feeling the need to develop certain skills (e.g. making shorter tests).

4) The Motivated and Motivating Teacher

This category accounted for diverse emotions and classroom activities that affected the teachers' view of the learning and teaching process. Its scope covers the image of a teacher who is motivated by his/her interest in teaching, attitude toward the subject matter, as well as the image of a teacher who motivates students by facilitating communication, offering interesting topics or expending effort on less proficient students. Their ideal future self-images were related to the following emotions: satisfaction, pride, relief, enthusiasm, frustration, anger.

Starting with positive emotions, the respondents' accounts were connected to satisfaction, pride, relief, and enthusiasm. *Satisfaction* was the dominant positive emotion and it was experienced by three teachers. One teacher was satisfied with the formal observation class that resulted in their promotion. The teacher assigned students in groups (who were working on a text) and presented various tasks. When inquired about their future teacher self-image, the teacher replied they would keep on trying to motivate the students to learn and love foreign languages. Another teacher felt quite satisfied with the progress of their less proficient students who had attended extra classes. This fostered the teacher's future self-image of a teacher who can motivate less proficient students and make them more active in class. In addition, another teacher experienced satisfaction during the class that focused on conflicts in the family. They revealed that the students were interested in the topic and expressed the interest in writing an essay about it. This reflected positively on the respondent's future teacher self-image as they said they would continue motivating the students by means of interesting and relatable topics.

In terms of other positive emotions, two teachers in the study recalled experiencing *pride*. The teacher who had a formal observation class and got promoted, as mentioned above, was also proud of their students' work and behavior, as well as their personal achievement (professional advancement). The same teacher also experienced *relief* knowing that everything had gone according to schedule. Another teacher admitted seeing themselves as a motivated teacher in the future owing to their successful preparation of tasks that their students managed to solve in class. An intriguing example related to *enthusiasm* was observed with a teacher who was impressed by the quality and level of maturity of their students' essays. This correlated to their future teacher self-image as they imagined themselves as a motivated teacher who was inspired by the "brilliance" of their students.

As far as negative emotions are concerned, three were reported in this study – frustration, disappointment and anger. Regarding *frustration*, two teachers reported experiencing it during one of their classes. According to one teacher, a student's inappropriate behavior (lying to the teacher during test analysis to get a higher grade) was what prompted the emotion. This incident influenced the teacher's future self-image in a way that they saw themselves as a teacher who was motivated to talk more with their students (in hopes of avoiding similar situations). The second example involved one of the respondents and their frustration with their students' lack of preparation for the exam. Given that this emotion occurred while the students were taking the exam and teacher was going over the

exams that had already been turned in, the respondent believed something had to be changed. When asked about their ideal teacher self-image, they expressed strong inclination toward motivating students more and devoting additional time to revising the subject matter.

A similar case of feeling determined to engage the students was observed in the next example where a teacher felt *disappointed* by their students' misbehavior and carelessness. More to the point, the students refused to acknowledge the teacher's warnings and showed little regard for their academic success. Their grades were borderline and they did not care about the grammar/vocabulary exercises they were supposed to be doing. Beside disappointment, this teacher experienced *anger* as well. This episode had a direct bearing on the respondent's ideal teacher self-image as they expressed the desire to motivate 'poor' students and get them interested in their grades.

5) The Positive and Optimistic Teacher

The examples in this category revolve around the image of a positive teacher, but also one that is enthusiastic and inspires students; however, it branches out to include teacher inspiration and enthusiasm. The images in this category were related to the following emotions: satisfaction, enthusiasm, excitement, sadness, anxiety, and shame. Respondents with the future self-image of a positive and optimistic teacher reported several positive emotions, such as enthusiasm, satisfaction and excitement. Starting with *enthusiasm*, four teachers in the study reported experiencing this emotion. Two of those teachers reflected on their enthusiasm about their students' performance in class (providing answers, ideas, using language properly, being engaged, etc.). This had a positive impact on their future teacher self-image as they revealed they imagined themselves as positive teachers. The other two teachers envisioned a future self-image related to a positive and optimistic teacher which was caused by their students' success and display of knowledge in class. For instance, one teacher felt enthusiastic about their students' good grades on the final exam, while the other related the emotion to their students' proper use of vocabulary when discussing their future plans after high school.

In terms of *satisfaction*, two teachers recalled being satisfied with their students' performance in class. One of them experienced the emotion during a grammar-based lesson (future tenses) which incorporated pair work. The students were grading each other's exercises and such cooperation and enjoyment reflected positively on the respondent's future self-image as the teacher stated they could imagine themselves as a positive and inspired

teacher. The other teacher also admitted being satisfied with their students' positive feedback during grammar practice. When asked about their ideal teacher self-image, they said they envisioned themselves as a teacher who would be even more enthusiastic with their students in the future.

The section on positive emotions in this category will be concluded with the example of teacher *excitement*. Namely, two teachers admitted feeling excited at work, however only one of those examples was specifically related to the classroom. The other occurred during the 'farewell to seniors' program which took place at school. Regarding the classroom example, one teacher felt excited while participating in an oral activity (guessing game) with the students. This situation influenced the teacher's future teacher self-image favorably as they said they could see themselves as a positive teacher. The same image was reported by the other teacher.

The image of a teacher who views themselves as positive, optimistic, and enthusiastic in the future was tied to negative emotions as well, including sadness, anxiety, and shame. According to the results, two teachers experienced *sadness* due to the departure of their senior students. This occurred during the final class where both the teachers and students engaged in the analysis of the previous four years. Both respondents reported a positive ideal teacher self-image and said they imagined themselves as positive and optimistic teachers. When it comes to *anxiety*, it is important to state that the emotion was not caused within the confines of a classroom. Rather, it occurred as a result of experiencing problems with organizing a trip with the students. The teacher was anxious however it did not have a detrimental effect on their self-image (which was that of the optimistic teacher in the future). Lastly, one teacher felt *ashamed* as they were unable to provide a swift answer to the students due to heat in the classroom (which impaired their cognitive functions). Despite the negative connotation of that situation, there were no negative effects on the teacher's ideal teacher self-image.

6) The Emotionally Intelligent Teacher

To clarify, the image of the emotionally intelligent teacher pertained to the teachers' awareness of their own, as well as their students' emotions; moreover, it reflects their ability to cope with emotions and accept them as integral aspects of learning and teaching. Furthermore, an emotionally intelligent teacher actively thinks about the effect their emotions have on their teaching, attempts to utilize different strategies of emotion regulation and

wishes to make their students aware of them. This future teacher self-image was linked to the emotions of joy, relief, enthusiasm, love and affection, empathy, frustration, sadness, irritability, powerlessness, and tension.

In terms of positive emotions, the respondents in the study reported the image of emotionally intelligent teacher being tied to joy, relief, pride, enthusiasm, love and affection, and empathy. The first positive emotion that will be discussed is *joy,* which was experienced by two teachers in the classroom; moreover, one of them felt joyful when they witnessed the effort from a typically unmotivated student, while the other experienced it during a final oral examination. To illustrate, the former teacher felt the emotion when they observed the student in question participating in grammar revision tasks. They were moved and when asked about their future teacher self-image, they responded that they imagined themselves as a hard-working teacher who would focus more on regulating their emotions in class. The latter teacher felt joyful during a final oral examination (examining bad students for a positive grade). The students had learned what the teacher asked them to, so that reflected positively on their future self-image of a teacher with a higher awareness of the emotions in the process of learning and teaching. The same teacher reported feeling *relieved* that the students in question had arrived prepared and negative outcome had been avoided, and *proud* of their progress.

Regarding *enthusiasm*, two teachers reported this emotion in connection to their students' positive feedback. One teacher was enthusiastic about their students' favorable reactions while doing grammar revision tasks for the upcoming exam. Despite the positive situation, the teacher revealed they imagined themselves as someone who was more skilled at keeping their composure when expressing one's emotions in front of the students. The second teacher admitted experiencing something similar while introducing new vocabulary. They felt enthusiastic when their students were happy to try the new words out and integrate them into their already existing knowledge. Akin to the previous example, this teacher's ideal teacher self-image was that of a composed teacher who is capable of toning down their emotions in front of their students (suppression).

When it comes to *love and affection*, one teacher revealed an interesting situation in which they experienced the emotion because of their students' positive rapport and show of respect during a class discussion on a certain topic. This influenced the teacher's ideal future self-image such that they envisioned themselves as a teacher who encourages their students to

express their emotions and talk about them. The final positive emotion in this section was *empathy*. One teacher felt empathy toward a student who had experienced an asthma attack while the class was working on vocabulary consolidation tasks. When asked how that episode affected their future teacher self-image, the teacher replied that they imagined themselves as a teacher who is skilled at controlling emotional responses. In addition, the teacher explained that one needed to be able to control their emotions so that they could express them appropriately.

The image of a teacher who was emotionally intelligent was associated with negative emotions, such as frustration, sadness, irritability, powerlessness, and tension. As regards to *frustration*, one teacher reported the emotion after witnessing inappropriate behavior by some students while the class was covering new vocabulary. The negative situation notwithstanding, the teacher admitted that their future teacher self-image was that of a teacher who able to retain composure (indicating the ability to control their emotions). In terms of *sadness*, another teacher recalled observing students who lacked study habits and who were lazy, but had potential they did not live up to. The teacher felt sad because of it while revising for the final exam with the students. When asked about their ideal teacher future image, the respondent revealed that they imagined themselves as a teacher who would have a higher level of awareness pertaining to both types of emotions (positive and negative) being part of the teaching process. In addition, they stated that they would attempt to change the way they thought about the students so it would diminish the power of their negative emotion (e.g. being mindful that the students are in their first year of high school and that there was enough time for them to improve).

Irritability was another negative emotion reported in the study. One teacher felt quite irritated by the repetitive disruptive behavior of some students during a vocabulary revision class. This affected their future teacher self-image as they envisioned themselves as a teacher who was more adept at controlling their emotions (being composed in front of the students). With regards to *powerlessness*, one teacher recalled feeling incapable of managing the students' group work and keeping them on task. This had a direct bearing on their future teacher self-image as the teacher aimed to develop their mechanisms of coping with emotions.

Lastly, a similar example was provided by another teacher who experienced *tension* in class owing to a young student with behavioral problems. Despite the teacher's best efforts to remain calm, the student kept interrupting. This directly affected the teacher's future self-image as they stated they would strive to regulate and express their emotions in class better in the future.

7) The Confident Teacher

The image of a confident teacher was linked to the aspect of an educator that exudes confidence in their own teaching abilities, as well as that of their students, was tied to different emotions, such as satisfaction, joy, pride, enthusiasm, and disappointment. With respect to the positive emotions, *satisfaction* will be addressed first. Three teachers recalled being satisfied either with their personal goals being achieved or their students' success in class. One of them reported feeling satisfied during the class that focused on for and against essays. The students' creativity and display of advanced reasoning were the causes of the emotion and that had a favorable impact on the respondent's future self-image; furthermore, they imagined themselves as a confident teacher who builds good rapport with the students and encourages them to learn as much as possible.

In line with students' success, another teacher experienced satisfaction due to their students' success in giving oral presentations (show and tell). Given the preparation, interest and eloquence shown by the students, the teacher revealed that they imagined themselves as a teacher who had confidence in themselves and their students. The same teacher experienced *pride* in their students' progress. Moving away from student success, another teacher felt satisfied with their own success in class. Namely, the teacher's confidence was boosted by the fact that they managed to complete the student's book ahead of schedule and that allowed them additional time to introduce other content, such as watching documentaries, covering texts related to art, culture, and other topics.

As far as *joy* is concerned, two teachers mentioned experiencing it in their classrooms. One of them was already mentioned in the case of witnessing their students' ideas and reasoning when dealing with for and against essays. The same teacher experienced pride and *enthusiasm* as well. Another teacher that experienced joy recalled experiencing the emotion while observing their students doing second conditional sentences (translating from Croatian to English). The students in question showed clear understanding of the subject matter and

that affected the teacher's self-image favorably in a way that they could imagine themselves as a confident and adaptable teacher.

The ideal future teacher self-image of a confident teacher was linked to a single negative emotion – *disappointment*. The emotion was experienced by two teachers. To illustrate, one teacher recalled a class in which they worked on writing introductory paragraphs in essays. Their disappointment was caused by students who invested little effort into their writing assignment. Regardless of this situation, the teacher's ideal future teacher self-image remained undeterred as they imagined themselves as a teacher who was confident in their teaching abilities. Another teacher felt disappointed by their students' lack of preparation for the short story presentations, as well as their (according to the respondent) usual confusion. The teacher's ideal future teacher self was positive despite the situation described and their image of themselves was still one of confidence.

8) The Pessimistic Teacher

The image of a pessimistic teacher was a peculiar one, however, it emerged in relation to several negative emotions, such as frustration, anger, and anxiety. It embodies the image of a teacher that considers leaving the teaching profession. With respect to *frustration*, one respondent recounted the situation where they were hampered by malfunctioning equipment which prevented them from performing their job (in this case, grading students). The teacher attempted to retain their composure, however they stated they could not see themselves as a teacher in the future. The teacher added that "tomorrow is another day" which implied that the current episode might have caused them to regard their profession negatively.

Another teacher admitted feeling anger toward a 9-year-old student who questioned their competence in class. More accurately, the students were working on a text and one of them questioned the teacher's knowledge of pronunciation. Though experiencing anger seemed plausible, the response to how they imagined themselves in the future was perplexing – they stated that they considered leaving the profession. Lastly, with regards to *anxiety*, one teacher recalled experiencing it during a whole class discussion on student obligations. The emotion was caused by a complete lack of enthusiasm and interest among the students (they were not concerned about completing the school year successfully). The teacher tried to breathe deeply to overcome the feeling of anxiety. When the respondent was asked about their ideal future teacher self-image, they responded they imagined themselves as a teacher who leaves the teaching profession.

4.1.5. Teaching Self-efficacy Beliefs

The following section addresses the teachers' self-efficacy beliefs related to teaching. They were asked to rate the confidence in their teaching abilities after each working day. This was accomplished by means of an open-ended question at the end of the teacher diary. The results are presented in two subsections: teaching self-efficacy beliefs tied to positive and negative emotions. The teachers' self-appraisals will also be portrayed with respect to different classroom activities and causes.

Positive emotions

The results of the qualitative study revealed that the respondents exhibited various degrees of teaching self-efficacy in relation to positive emotions. To elaborate, the teachers' confidence in their teaching abilities could have been rated as high, moderate or low; moreover, the respondents used different expressions to express their degree of confidence, as will become apparent in the upcoming sections. The findings showed that majority of the respondents reported *high levels* of confidence in their teaching abilities. The respondents used the following words/phrases to express their high level of self-efficacy: "I am quite confident," or the variations on a theme (for instance, very/pretty/really/completely confident); 4/5 (using a scoring system to express how confident they are). With regards to positive emotions, the teachers in this study recalled being highly confident in their teaching abilities when they experienced satisfaction, enjoyment, joy, pride and enthusiasm. These emotions emerged as prevalent among the teachers, while emotions such as love and affection, excitement and liking were the least frequent ones.

In terms of classroom activities, the majority of the teachers reported exhibiting high levels of teaching self-efficacy in relation to activities that involved grammar. They recalled feeling quite efficacious after classes where students demonstrated knowledge of grammar, showed interest in different tenses, worked diligently on grammar tasks, and other. When asked which emotions accompanied those classroom activities, they reported on satisfaction, enjoyment, joy, pride, relief, love and affection. The second most frequent class activities (equal in frequency) reported were oral examination and observing students' oral presentations. The teachers recalled oral exams with students who came well prepared (even some that were usually negligent), those who demonstrated high levels of language proficiency, provided positive feedback to the teacher (younger students) and so on. With regards to oral examination, the teachers recalled experiencing satisfaction, pride, relief, love

and affection. As far as student presentations are concerned, the teachers' self-efficacy was high after observing well-prepared and executed oral reports, students who demonstrated creativity, eloquence and interest in the topic. Having observed them, the teachers recollected feeling satisfaction, enjoyment, and pride.

The positive emotions connected with high levels of self-efficacy were also connected to other classroom activities, such as writing tasks, speaking activities and doing exam revision with the entire class. To illustrate, several teachers reported reading well-written, interesting assignments or simply recalled being satisfied that the students had done the task properly. When asked which emotions they felt as a result, the teachers revealed experiencing enjoyment, joy, pride, enthusiasm, relief, and liking. When it comes to speaking activities, one teacher recalled participating in a guessing game with their students and feeling quite excited and self-efficacious after the class. In relation to exam revision, students' good results contributed not only to the teacher's high level of self-efficacy, but were also the cause of positive emotions, such satisfaction, joy, pride, and relief.

The teachers that were *moderately* confident in their teaching abilities comprised the second largest group. When asked to disclose how confident they were in their teaching abilities, they used some of the following phrases: "I'd give myself a C" (using the grading system to indicate their level of teaching self-efficacy); "I'm confident.", "I'm positive about my teaching abilities."; "I'd rate myself 3/5" (utilizing the scoring system) or "I have a lot to learn/I need to grow." The teachers that were moderately confident reported experiencing satisfaction, joy, enjoyment, and empathy the most. On the other end, the least experienced positive emotions included pride, relief, liking, and excitement. To illustrate the teacher's emotions in connection to classroom activities, the results showed student projects/workshops and class discussions to be the most frequent. When the teachers were asked how they felt during or following those classroom activities, they admitted feeling satisfied (e.g. having observed an interesting classroom discussion), enjoying students' success in successfully completing a project on British and American cuisine, joyful, proud, enthusiastic, relieved, and empathetic. Among the top three were different forms of classroom organization, such as pair work and groupwork. Student-lead projects and workshops were the cause of positive emotions among the teachers; however, they also created the feeling of uncertainty (being unsure whether the students would be able to do them successfully). Other activities that the teachers recalled included a positive atmosphere, outspoken, motivated and engaged students, as well as good feedback from them when it comes to the class discussions. Though

somewhat less frequent, the teachers' recalled putting students in pairs or groups and assigning them with different tasks. They recounted the students' use of language, participation, humor, high level of activity, as well as hoping everything goes well, as in the case of a teacher who had a formal observation class for a promotion. These types of activities resulted in the teachers feeling satisfied (e.g. after successfully observing students' group work in which they did reading comprehension tasks), enjoying a good working atmosphere while the students did a group project related to visions of the future, or excited (e.g. seeing how the students' collaboration contributed to the quality of the lesson that resulted in teacher's promotion).

The teachers' moderate level of self-efficacy was also tied to exam revision, testing and reporting a story which were the least frequent classroom activities. Exam revision was associated with grammar and vocabulary tasks, managing to do a lot of tasks with the students, and observing their happiness in the classroom. When inquired about the positive emotions that were connected to these activities, the teachers remembered feeling satisfied, joyful, and empathetic. In terms of testing, one teacher recalled empathizing with the students because they did not prepare for a test on time and the students had less time to complete it. They reported a moderately high self-efficacy after that class. Reporting a story involved a situation in which the students worked together and willingly engaged in a follow-up discussion on the topic.

Lastly, the third and smallest group was comprised of teachers with low confidence in their teaching abilities. They expressed it by saying they felt "less confident than usual" and by stating "God, help me! I want to be better." Furthermore, the only positive emotion that these two teachers experienced in class was joy. There were no other reports of low levels of self-efficacy connected to other positive emotions. The teachers in this study mentioned two classroom activities related to low appraisal of teaching self-efficacy: class observation and grammar revision. In terms of the former, one teacher recalled observing student teachers carrying out a lesson, while the latter involved effort from a typically unmotivated student during grammar revision tasks.

Negative emotions

Teacher self-efficacy was also tied to negative emotions. Teachers' confidence in their teaching abilities was appraised as high, moderate and low. The findings below will reveal the most and least prominent negative emotions experienced by the teachers in this study, as well as the most and least frequent classroom activities associated with their self-appraisal.

According to the results, among teachers that experienced negative emotions in relation to teacher self-efficacy, less than half of the teachers said they were highly confident in their teaching abilities. This can be justified by the fact that this group of teachers must have rated their self-efficacy beliefs as strong enough to resist the negative effects of occasional unpleasant emotions in the classroom. Also, certain classroom activities may evoke negative emotions in teachers (e.g. boredom); however, they need not have long lasting repercussions on the confidence they have in their teaching abilities. When considering how the teachers in this study expressed their confidence to teach, the results showed they used almost identical wording to that of the teachers in the section above (positive emotions) to denote their high level of self-efficacy. Some of them were "quite/very/pretty confident"; "4/5", or "My teaching abilities are very good." In terms of negative emotions, the prominent ones, as reported by these teachers, were frustration, disappointment, and irritability. On the other hand, anxiety, guilt, and shame were among the least experienced negative emotions in the classroom.

With respect to classroom activities related to negative emotions, teachers in this study listed grammar tasks and testing (exams) to be the most prominent. The third most frequent activity was taking oral exams. Starting with grammatical content, the teachers recalled experiencing negative emotions, such as frustration, irritability, boredom, anxiety, and shame, due to students' inattentiveness, lack of activity, repeating the same exercises all over again, students' inability to comprehend the content and others. Despite that, they reported being quite confident in their teaching abilities. In terms of testing, negative emotions stemmed from reasons such as not preparing tests on time, students trying to cheat (e.g. using their phones), monitoring students and not having anything to do, and so on.

When asked how they felt having gone through those situations, the teachers reported emotions such as frustration, anger, boredom, powerlessness, and fear. Regarding oral exams, the teachers recollected experiencing negative emotions due to malfunctioning equipment (preventing them to put in grades), students' lack of preparation, not showing interest in correcting bad grades, and others. The emotions they reported were frustration, irritability, and anger.

Moderate levels of teacher self-efficacy belonged to the second most frequent group. When appraising their self-efficacy in their words, the teachers stated that they had "become mediocre", felt "shaken but confident", believed "confident I can do better with control of my reactions", or that their "teaching abilities are getting better." Furthermore, these teachers stated they had mainly experienced frustration, disappointment, irritability and boredom in class. Among the less frequently felt negative emotions were anger, sadness, powerlessness and anxiety. Concerning the classroom activities tied to moderate level of teaching self-efficacy, the teachers listed grammatical tasks and testing (akin to the previous group) as the most frequent activities.

Observing student presentations and workshops/projects came right after them in terms of frequency. To illustrate an example focused on grammar-based tasks, one teacher recollected a group of misbehaving students while working on grammar. Despite the negative experience and feeling disappointed, they remained confident in their teaching abilities. In terms of testing, one teacher recalled experiencing disappointment due to the students' lack of preparation for the exam (the teacher was going through the exams that had already been submitted and noted the large number of mistakes). Regarding student presentations and workshops/projects, another teacher reported a group of uncooperative and disruptive students interfering with other students' oral reports. They also mentioned some students who were still not able to use present simple properly. These instances resulted in those teachers experiencing disappointed and irritated.

A small number of teachers expressed low confidence in their abilities to teach which were connected with negative emotions. Their level of self-efficacy was reflected in the statements, such as "God, help me! I want to be better," "I am not very confident," or "I am less confident than usual." According to the respondents' accounts, frustration, sadness, irritability, anxiety, powerlessness, shame and hostility were the negative emotions experienced by this group. Given the small number of teachers that reported low levels of

teaching self-efficacy, only the most and least frequent classroom activities will be presented. According to the results, the most frequent classroom activities associated with low appraisals of teaching self-efficacy were grammar tasks and entering student grades into the system (equal in frequency). For instance, one teacher was upset because a group of students did not bring their assignments, while another teacher was disaffected because they did not consider the students' capabilities when designing tasks (the tasks were overly easy). In terms of entering students' grades, one teacher felt bad owing to their inability to control the classroom while doing the administrative part of assessment (putting in grades). Another teacher recalled below average grades and lack of ambition among their students.

4.2. Quantitative Analysis – Questionnaire

4.2.1. Descriptive analyses

Descriptive analysis was carried out on five separate scales, namely Teacher Self-efficacy Scale (TSES), Foreign Language Teacher Efficacy Scale (FLTES), Foreign Language Teacher Self-Concept Scale (FLTSC), Teacher Emotion Questionnaire (TEQ), and Teacher Emotional Labor Scale (TELS). The results can be seen in Table 1.

Scale	Range	Subscale(s)	N	M	SD	Cronbach's Alpha
TSES	**9-point scale (1 – nothing; 3 – very little, 5 – some influence, 7 – quite a bit, 9 – a great deal)**	**Instructional Strategies (IS)**	320	7.19	.98	.77
		Classroom Management (CM)	320	6.65	1.37	.88
		Student Engagement (SE)	320	6.20	1.18	.76
FLTES	**0-100 scale (0 – cannot do at all, 50 – moderately certain can do, 100 – highly certain can**	**Content Knowledge (CK)**	320	89.13	13.95	.80
		Teacher as Facilitator (TF)	320	76.01	13.72	.84
FLTSC	**5-point scale (1- strongly disagree , 5 –**	**FLTSC**	320	3.87	3.35	.65
TEQ	**5-point scale (1- strongly disagree, 5 – strongly agree**	**Joy**	319	4.57	.39	.69
		Pride	319	4.29	.52	.84
		Love	319	3.57	.69	.87
		Anger	319	2.58	.79	.78

		Fatigue/Exhaustion	319	3.03	.89	.92
		Hopelessness	319	2.89	.77	.80
TELS	**5-point scale (1 – never, 2 – rarely, 3 – sometimes, 4 – often, 5 – always)**	**Surface Acting (SA)**	318	2.38	.68	.83
		Deep Acting (DA)	318	2.60	.76	.73
		Naturally Felt Emotions (NFE)	318	3.94	.63	.80

Table 1. Descriptive analysis of the scales used in the research - Means, Number, Standard Deviations, and Cronbach's Alpha coefficients.

The first scale to be analyzed was the Teacher Self-efficacy Scale (TSES) which had three subscales: Instructional Strategies (IS), Classroom Management (CM), and Student Engagement (SE). The upcoming findings will be discussed according to the range of the TSES scale. To briefly exemplify, we can speak of lower levels of teaching self-efficacy if the results range from 1 to 4 on the scale. In case of higher results, i.e. from 5 to 7, we may infer that teaching efficacy is moderately high. Lastly, scores ranging from 8 to 9 indicate high levels of teaching efficacy. The results of the first subscale, IS, showed that the teachers in the study exhibited moderate confidence in their ability to provide alternative explanations and use a variety of instructional and assessment strategies. In terms of the second subscale, named CM, the teachers revealed a somewhat lower appraisal of their ability to control the classroom, but one that was still moderately high. With regards to the third subscale (SE), the teachers also had a moderately high confidence in their ability to help their students value learning and motivate them in the classroom. The descriptive analysis of the second scale, named Foreign Language Teacher Efficacy Scale (FLTES), was carried out on the following subscales: Content Knowledge (CK) and Teacher as Facilitator (TF). Starting with CK, the teachers in the study exhibited a moderately high level of confidence in their knowledge of English, as well as their ability to use it in class. When it comes to TF, the result was lower

and it revealed a moderate appraisal of the teachers' capacity to foster the students' interest in foreign languages and help them learn at highest levels.

Another scale used was related to second language teacher motivational beliefs, namely, the Foreign Language Teacher Self-Concept (FLTSC) scale. It was a single-factor scale designed to test the teachers' ideal teacher self-image, ought-to self and teacher feared self-image. According to the findings, the teachers in the study showed moderate levels of teacher self-concept. The following scale analyzed was labeled the Teacher Emotion Questionnaire (TEQ) and it contained six subscales: Joy, Pride, Love, Anger, Fatigue/Exhaustion, and Hopelessness. Concerning Joy, the teachers showed a high level of agreement with the fact that they experienced this emotion when their goals were achieved or when their students comprehended the teaching content. Next, the teachers also revealed high levels of pride upon seeing their students' success, managing to get their students interested in the language they teach, or feeling that they (teachers) must be doing a good job witnessing their students' achievements. With respect to love the teachers showed moderate levels of this emotion, thereby stating that they may or may not be showing warmth when they think about their students, feeling affection toward them, or even wanting to hug their students. Regarding the unpleasant emotions, the teachers expressed low levels of anger overall when asked if they experience the emotion due to certain students' reactions or behavior. Moreover, teachers illustrated moderate levels of fatigue/exhaustion when inquired whether they experience the emotions at the end of a working day, their class, or simply after working with children. The scale depicting hopelessness yielded interesting results. The teachers showed low levels of hopelessness in connection to some students' behavior, their lacking achievement, or getting through to them.

The Teacher Emotional Labor Scale (TELS) was comprised of three subscales: Surface Acting (SA), Deep Acting (DA), and Naturally Felt Emotions (NFE). In terms of SA, the teachers in the study showed low levels of engaging in behavior that would be construed as putting on a mask or an act to deal with the students in an appropriate manner. In other words, they rarely pretended to have certain emotions in front of their students. Concerning DA, they revealed low levels of deep acting indicating that they infrequently worked at developing the emotions they are supposed to show when dealing with their students. Furthermore, the results related to NFE showed moderate levels indicating that teachers often express genuine emotions in front of their students.

4.2.2. Correlation analysis

In an effort to investigate the relationship between second language teacher motivational beliefs, the emotions teachers experience while teaching and in their interactions with students, along with emotional labor strategies, correlation analyses were carried out. The correlations between tested variables can be seen in Table 2. The first section will address the relationship between the respondents' gender and other variables. To start with, the findings pointed to a positive correlation between gender and years of working experience ($r = .116$, $p<.05$). As far as teaching self-efficacy is concerned, a positive correlation between gender and two variables was noted: classroom management ($r = .194$, $p<.01$), and student engagement ($r = .161$, $p<.01$). To clarify further, female teachers exhibited a higher level of confidence in their ability to manage the classroom than male teachers. Moreover, female teachers also displayed higher level of confidence in their capacity to engage their students and help them value learning.

When it comes to variables related to foreign language teaching self-efficacy, the results showed a positive correlation between gender and teacher as facilitator ($r = .119$, $p<.01$). Female teachers reported higher levels of confidence with regards to fostering their learners' interest about learning English and facilitating their learning process in comparison to male teachers. A significant positive correlation was also observed between gender and teacher self-concept variable ($r = .130$, $p<.01$). It can be said that female teachers had a somewhat clearer image of their teacher identity than male teachers. In regards to emotions, the correlation analysis pointed to a positive relationship between gender and all positive emotions, namely joy ($r = .113$, $p<.05$), pride ($r = .163$, $p<.01$), and love ($r = .151$, $p<.01$) female teachers reported higher levels of positive emotions than male teachers did. There were no statistically significant correlations of any kind between gender, negative emotions, and emotional labor strategies.

Years of working experience correlated with several variables in this study. When it comes to self-efficacy, years of working experience correlated positively with instructional strategies, classroom management, and student engagement. This indicates that the more teachers worked, the higher their confidence was in their ability to instruct their students properly ($r = .324$, $p<.01$), to organize the classes ($r = .283$, $p<.01$), and to motivate and engage their students ($r = .328$, $p<.01$). In terms of foreign language teaching efficacy, a positive correlation was found in relation to teacher as facilitator.

TABLE 2. Correlations

PUT HERE

In other words, the longer the teachers worked, the more secure they felt about their ability to foster their students' interest in language learning and facilitate their learning process (r = .221, p<.01). The final motivational component, namely foreign language teachers' self-concept, correlated positively with the years of working experience. According to this, teachers who worked longer reported having a better understanding of what kind of teacher they wanted to be in the future (r = .168, p<.01). With regards to emotions, the results varied. Firstly, years of working experience correlated positively with love. This would indicate that the longer the teachers worked, the more likely they were to show love toward their students (r = .125, p<.05). On the other hand, years of working experience correlated negatively with all the negative emotions. Teachers who worked longer were less likely to experience anger (r = -.179, p<.01), fatigue (r = -.175, p<.01) or hopelessness (r = -.261, p<.01) in class. Positive correlation was noted in relation to naturally felt emotions, while negative one was observed in connection with surface acting and deep acting. This would imply that the longer the teachers worked, the more likely they were to show their true emotions in front of the students (r = .137, p<.05). On the contrary, the more they worked, the less likely they were to mask their true emotions (r = -.113, p<.05) or to invest effort in exhibiting the emotions they were supposed to (r = -.121, p<.05).

Starting with self-efficacy variables, the results showed a strong correlation between the variables that represented general teaching self-efficacy. In other words, the teachers who reported being confident in their ability to use proper instructional strategies also stated they were confident in their classroom management skills (r = .585, p<.01), as well as those connected to student engagement (r = .643, p<.01). The same association can be observed between general and foreign language teaching self-efficacy with the exception of one variable. Teachers who exhibited confidence in content knowledge (indicating their knowledge of English) reported being confident enough to provide proper instructional strategies to the students (r = .186, p<.05) and manage their classroom (r = .163, p<.05). Interestingly, there was no significant correlation between content knowledge and student engagement. On the other hand, teachers who believed they could facilitate learning and motivate their students (teacher as facilitator) also strongly believed they could use proper instructional strategies (r = .531, p<.01), manage their classroom well (r = .502, p<.01), and engage their students (r = .628, p<-01). Another variable tied to second language teacher motivational beliefs was the foreign language teacher self-concept. According to the results, there was a moderate positive correlation between self-concept and other motivational

variables, such as general and foreign language teaching self-efficacy. In other words, teachers with a strong and clear image of who they wanted to be in the future claimed to be confident enough to instruct their students properly (r = .512, p<.01), manage the classroom (r = .364, p<.01), and engage and assist the students in learning (r = .450, p<.01). They were also positive about their knowledge of English (r = .213, p<.01), and their ability to foster their students' interest about learning (r = .449, p<.01).

When it comes to positive emotions, they were predominantly positively correlated with general and foreign language teaching self-efficacy with the exception of content knowledge. Teachers who reported feeling joy (r = .230, p<.01), pride (r = .193, p<.01), and love (r = .168, p<.01) claimed to be relatively confident to provide proper instructional strategies. In addition, teachers that experienced joy (r = .201, p<.01), pride (r = .179, p<.01), and love (r = .231, p<.01) also reported being moderately confident in their ability to manage their students. A slight difference can be observed with student engagement. Teachers who experienced these positive emotions showed higher confidence in their ability to engage the students during class. Moreover, teachers who were confident in their instructional (r = .531, p<.01), classroom management (r = .502, p<.01), and student engagement skills (r = .628, p<.01) reported being relatively confident in their capacity to facilitate learning among their students. What stands out is the fact that there was no positive correlation between positive emotions and content knowledge, except in the case of joy (r = .128, p<.01). Teachers who experienced joy (r = .338, p<.01), pride (r = .394, p<.01), and love (r = .378, p<.01) also reported having a strong self-concept image.

Negative emotions in this study correlated negatively with all the variables related to self-efficacy. In other words, teachers who reported experiencing anger (r = -.317, p<.01), fatigue/exhaustion (r = -.324, p<.01), or hopelessness (r = -.371, p<.01) in class also reported a lack of confidence in their capabilities to offer adequate instructional strategies to students. Moreover, teachers that experienced anger (r = -.420, p<.01), fatigue/exhaustion (r = -.392, p<.01), or hopelessness (r = -.556, p<.01) had lower confidence in their ability to establish a management system in their classes. The same situation holds true in the case of student engagement. Namely, teachers that felt angry (r = -.357, p<.01), fatigued/exhausted (r = -.367, p<.01), or hopeless (r = -.503, p<.01) in class were less confident in their capacity to engage their students. Furthermore, angry (r = -.206, p<.01) and hopeless teachers (r = -.165, p<.01) did not believe they had sufficient knowledge of English (content knowledge). In

terms of being a facilitating teacher, the participants that admitted feeling angry (r= -.380, p<.01), fatigued/exhausted (r = -.285, p<.01), or hopeless (r = -.420, p<.01) were less confident in their ability to promote learning among their students. The same teachers did not have a clear future self- image, meaning that experiencing anger (r = -.372, p<.01), fatigue/exhaustion (r = -.301, p<.01), or hopelessness (r = -.341, p<.01) reflected negatively on the notion of who they were aspiring to become one day. The same can be observed in connection with positive emotions. In other words, teachers that experienced unpleasant emotions did not report experiencing pleasant ones. To briefly exemplify, angry teachers did not experience joy (r = -.241, p<.01), pride (r = -.173, p<.01), or love (r = -.336, p<.01) toward their students.

In terms of emotional labor strategies and their relation to self-efficacy, we can observe that the results varied. Firstly, surface acting correlated negatively with all the variables pertaining to self-efficacy. Teachers who reported showing false emotions or suppressing them did not seem to be confident in their ability to provide instructional strategies (r = -.133, p<.05), manage the classroom (r = -.165, p<.01), or engage the students (r = -.150, p<.01). The same was true to for foreign language teaching – the teachers that pretended to have certain emotions were not confident enough in their ability to foster students' learning (r = -.140, p<.05). Moreover, deep acting only correlated positively with student engagement (r = .168, p<.01) and teacher as facilitator (r = .113, p<.05). Interestingly, both variables have to do with engaging, motivating, and facilitating the students' learning process. So, teachers that worked hard on developing appropriate emotions to show to their students reported being somewhat confident in their ability to motivate and engage their students. Lastly, there was a positive correlation between naturally felt emotions and almost all motivational variables. Content knowledge was the exception. Therefore, it can be said that teachers who showed their true emotions to the students were confident in their abilities to provide proper instructional strategies (r = .272, p<.01), to manage the students (r = .200, p<.01), and to engage them adequately (r = .257, p<.01). The final variable related to teacher motivational beliefs was foreign language teacher self-concept. The results revealed a generally positive correlation between certain emotional labor strategies and teacher self-concept. More to the point, teachers who made attempt to show appropriate emotions to their students (r = .182, p<.01), as well as those who showed their natural emotions (r = .222, p<.01), had a clear future self-image.

The following section will discuss the relationship between various emotions and emotional labor strategies. Firstly, the results showed a negative correlation between surface acting and positive emotions, such as joy ($r = -.142$, $p<.05$), pride ($r = -.134$, $p<.05$), and love ($r = -.194$, $p<.01$). According to this, teachers who did not show how they genuinely felt to the students did not experience any of the positive emotions listed. Secondly, low to moderate positive correlation was observed between positive emotions and two remaining strategies of emotional labor – deep acting and naturally felt emotions. This indicates that teachers who worked at developing the feelings they needed to show their students also admitted feeling joyful ($r = .164$, $p<.01$), proud ($r = .257$, $p<.01$), and love ($r = .290$, $p<.01$). Moreover, teachers that reported displaying their natural emotions in the classroom also experienced joy ($r = .295$, $p<.01$), pride ($r = .212$, $p<.01$), and love ($r = .326$, $p<.01$). Negative emotions, on the other hand, were positively correlated with only one strategy – surface acting. That means that the teachers who admitted faking their emotions in front of their learners also reported experiencing negative emotions, such as anger ($r = .269$, $p<.01$), fatigue ($r = .329$, $p<.01$), or hopelessness ($r = .224$, $p<.01$). The same relationship cannot be observed between negative emotions and the remaining two emotional labor variables – deep acting and naturally felt emotions. Teachers who worked on developing feelings they needed to show their students did not did not report experiencing anger, fatigue, or hopelessness in the classroom. Furthermore, teachers that showed how they truly felt did not admit to feeling angry ($r = -.283$, $p<.01$), fatigued/exhausted ($r = -.314$, $p<.01$), or hopeless ($r = -.264$, $p<.01$) in the classroom.

4.2.3. Structural Equation Modeling (SEM)

The second (2d) hypothesis in the study claimed that emotions mediate the relationship between emotion regulation strategies, specifically emotional labor, and motivational beliefs, namely self-efficacy and self-concept. More specifically, it was hypothesized that emotional labor strategies are related to teachers' emotions which are, in turn, related to their motivational beliefs, that is, emotional labor is related to motivational beliefs indirectly through emotions. To test the mediation hypothesis, structural equation modeling (SEM), was carried out. In SEM, observed variables are represented by means of a rectangle, while latent variables are depicted as a circle. Moreover, arrow signs are used to

denote the directional path (regression) among the variables. Next, emotional labor strategies, foreign language teacher self-efficacy beliefs and teacher self-concept were introduced in the model as manifest variables while teachers' positive and negative emotions, as well as self-efficacy, were introduced in the model as latent variables. Sums of scores on scales assessing positive emotions of joy, pride and love were used as indicators of latent variable named positive emotions, while sums of scores on scales measuring negative emotions of anger, fatigue/exhaustion and hopelessness were used as indicators of latent variable named negative emotions. Lastly, sums of scores on scales measuring efficacy for instructional strategies, classroom management and student engagement were used as indicators of latent variable labelled self-efficacy.

To keep the models that were tested parsimonious and to ease an interpretation of the results, three parallel sets of models were tested in which the only variable that differed was an outcome (or dependent) variable pertaining to a particular motivational belief. More specifically, in the first model, the outcome variable was teacher self-efficacy; in the second model, the outcome variable was foreign language teacher self-efficacy; and in the third model, the outcome variable was teacher self-concept. In all three models, emotional labor strategies were independent variables while teachers' emotions were mediating variables. In addition, to make the results empirically stronger, two competing and theoretically plausible models were tested and compared for each of the three models – the full mediation model (i.e., emotional labor is related to motivational beliefs completely via emotions) and partial mediation model (i.e., emotional labor is related to motivational beliefs both directly and indirectly via emotions).

The analyses were conducted using Mplus 8.0 (Muthèn & Muthèn, 1998–2017). The maximum-likelihood estimation method was used to determine model parameters, while the full information maximum likelihood estimation (FIML; Enders, 2010) was used to handle the missing data. The quality of model fit was assessed according to the following criteria: comparative fit index (CFI), Tucker-Lewis index (TLI), root-mean-square error of approximation (RMSEA), and standardized root-mean residual (SRMR). Values of CFI and TLI that are above .90 and .95 indicate acceptable and excellent fit, respectively (Hu & Bentler, 1999). Value of RMSEA lower than .06 and value of SRMR lower than .08, indicate good fit (Browne & Cudeck, 1993). Chi-square difference test ($\Delta\chi^2$) was calculated to ascertain the better fitting model while teshing competing measurement and structural models.

The obtained fit indices of all tested models are presented in Table 1. All tested models demonstrated at least acceptable fit to the data. In addition, partial mediation models did not fit the data better when compared to the full mediation models: $\Delta\chi^2(3)=2.312$, $p>0.05$, $\Delta\chi^2(6)=3.748$, $p>0.05$, $\Delta\chi^2(3)=3.496$, $p>0.05$ for models with teacher self-efficacy, foreign language teacher self-efficacy and teacher self-concept as outcomes, respectively. Therefore, it can be concluded that teachers' emotions fully mediated the relationship between emotional labor strategies and motivational beliefs.

Table 1. Fit indices of tested models

Teacher self-efficacy as outcome		
	Full mediation model	Partial mediation model
χ^2 (df)	155.882 (45)	153.570 (42)
CFI	.927	.926
TLI	.897	.889
RMSEA (90% C.I.)	.088 (.073, .103)	.091 (.076, .107)
SRMR	.049	.049
Foreign language teacher self-efficacy as outcome		
	Full mediation model	Partial mediation model
χ^2 (df)	99.876 (34)	96.128 (28)
CFI	.941	.939
TLI	.910	.887
RMSEA (90% C.I.)	.078 (.060, .096)	.087 (.068, .107)
SRMR	.044	.044
Self-concept as outcome		
	Full mediation model	Partial mediation model
χ^2 (df)	78.578 (27)	75.489 (24)
CFI	.952	.952
TLI	.925	.916
RMSEA (90% C.I.)	.077 (.058, .097)	.082 (.061, .103)
SRMR	.044	.043

The results of the full mediation model with teacher self-efficacy as outcome are presented in Figure 1. As expected, deep acting was positively related to positive emotions (β=.426, p<.01) and negatively to negative emotions (β=-.144, p<.05). Similar pattern of relations was found for the strategy of naturally felt emotions which was positively related to positive emotions (β=.364, p<.01) and negatively to negative emotions (β=-.228, p<.01). Surface acting was positively related to negative emotions (β=.219 p<.01) but unrelated to positive emotions (β=-.123, p>.05). In turn, positive emotions were positively related to teacher self-efficacy (β=.268, p<.01) while negative emotions were negatively related to teacher self-efficacy (β=-.515, p<.01).

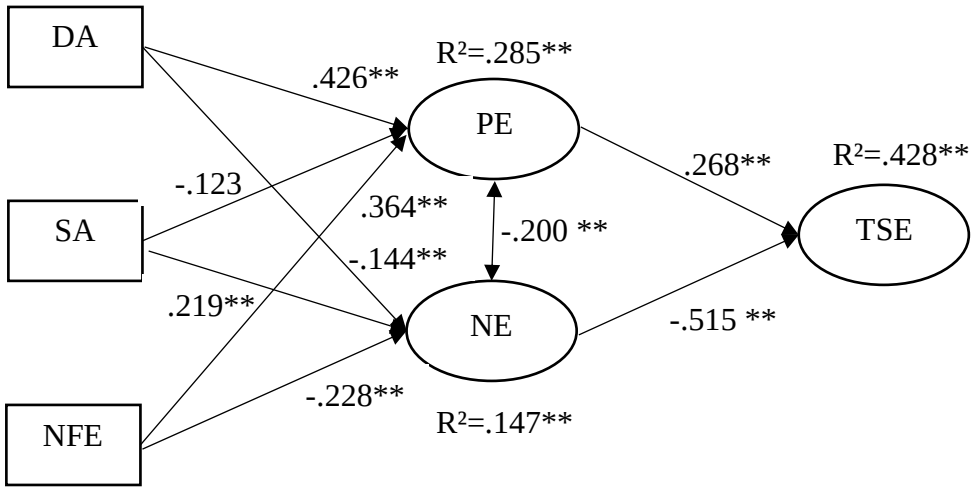

Figure 1. Mediation model with teacher self-efficacy as outcome

Note. DA=deep acting, SA=surface acting, NFE=naturally felt emotions, PE=positive emotions, NE=negative emotions, TSE=teacher self-efficacy

* p<.05, **p<.01

Similar results were found while testing the model with foreign language teacher self-efficacy as outcome. Deep acting was positively related to positive emotions (β=.435, p<.01) and negatively to negative emotions (β=-.141, p<.05), while naturally felt emotions were positively related to positive emotions (β=.362, p<.01) and negatively to negative emotions (β=-.223, p<.01). Again, surface acting was positively related to negative emotions (β=.224,

p<.01) but unrelated to positive emotions (β=-.128, p>.05). In turn, positive emotions were positively related to teacher as facilitator (β=.261, p<.01), but unrelated to content knowledge (β=.043, p>.05). Lastly, negative emotions were negatively related to both content knowledge (β=-.214, p<.01) and teacher as facilitator aspect of foreign language teacher self-efficacy (β=-.347, p<.01).

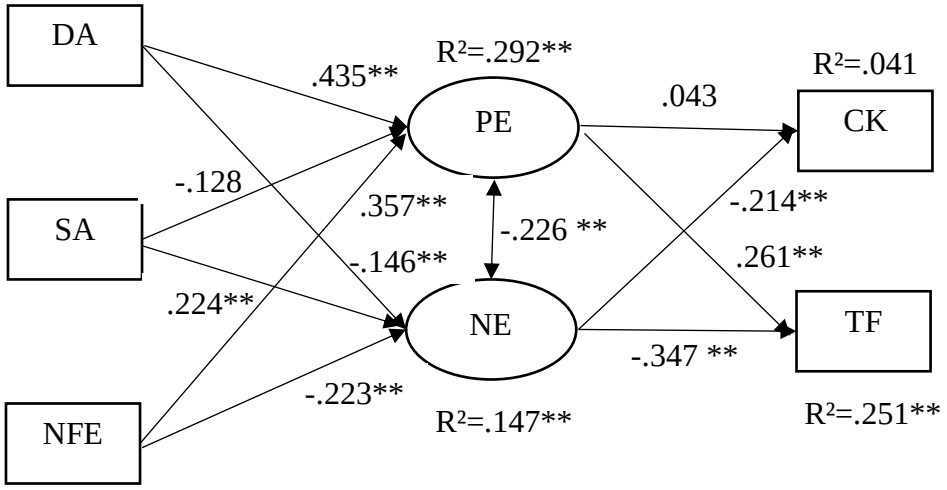

Figure 2. Mediation model with foreign language teacher self-efficacy as outcome

Note. DA=deep acting, SA=surface acting, NFE=naturally felt emotions, PE=positive emotions, NE=negative emotions, CK=content knowledge, TF=teacher as facilitator

* p<.05, **p<.01

Finally, results of the model with teacher self-concept as outcome is presented in Figure 3. As in previous models, deep acting was positively related to positive emotions (β=.430, p<.01) and negatively to negative emotions (β=-.139, p<.05), while naturally felt emotions were positively related to positive emotions (β=.366, p<.01) and negatively to negative emotions (β=-.224, p<.01). In addition, surface acting was positively related to negative emotions (β=.221, p<.01) and unrelated to positive emotions (β=-.117, p>.05). Similar to the results of tests of the previous models, positive emotions were positively related to teacher self-concept (β=.406, p<.01) while the relationship between negative emotions and teacher self-concept was negative (β=-.264, p<.01).

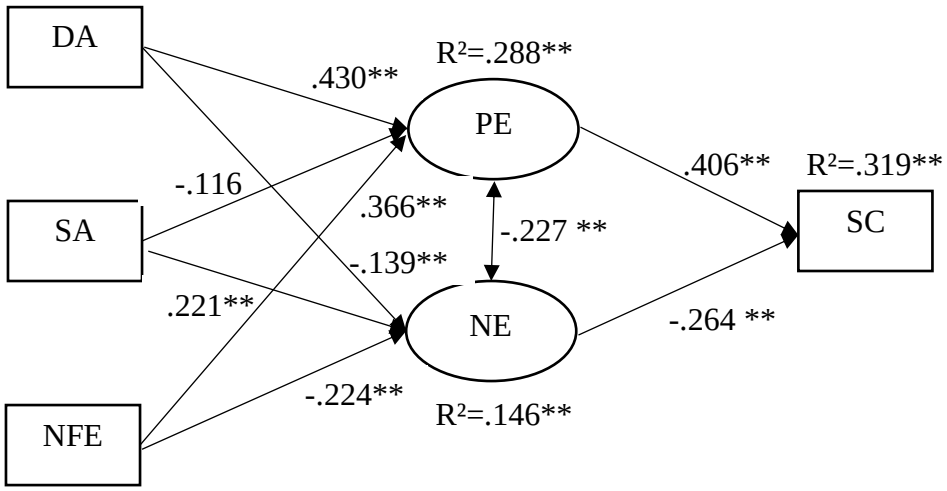

Figure 3. Mediation model with teacher self-concept as outcome

Note. DA=deep acting, SA=surface acting, NFE=naturally felt emotions, PE=positive emotions, NE=negative emotions, SC=self-concept

* p<.05, **p<.01

Models presented in figures 1, 2 and 3 imply that emotional labor strategies shape teachers' motivational beliefs indirectly through positive and negative emotions. However, each of the proposed indirect paths was additionally tested for its statistical significance by calculating bias corrected confidence intervals with bootstrap option in Mplus and based on 2000 subsamples. A specific indirect effect can be considered statistically significant if its 95% confidence intervals does not include zero. The results of these tests are shown in Table 2.

Table 2. Test of indirect effects

Teacher self-efficacy as outcome			
Indirect effect	**b**	**95% C.I.**	**99% C.I.**
DA → PE → TSE	.110	.061, .181	.043, .210
DA → NE → TSE	.074	.006, .155	*-.015, .179*
SA → PE → TSE	*-.024*	*-.059, .002*	*-.075, .014*

SA → NE → TSE	-.083	-.157, -.021	-.183, -.005
NFE → PE → TSE	.150	.067, .279	.043, .340
NFE → NE → TSE	-.186	.075, .362	.043, .362
Foreign language teacher self-efficacy as outcome			
Indirect effect	**b**	**95% C.I.**	**99% C.I.**
DA → PE → CK	*-.335*	*-1.568, .674*	*-1.979, 1.150*
DA → NE → CK	.541	.095, 1.256	*-.072, 1.459*
SA → PE → CK	*.074*	*-.130, .546*	*-.250, .783*
SA → NE → CK	-.644	-1.458, -.127	-1.786, -.039
NFE → PE → CK	*-.447*	*-1.944, 1.003*	*-2.819, 1.551*
NFE → NE → CK	1.376	.422, 2.912	.197, 3.580
DA → PE → TF	3.045	1.600, 5.044	1.201, 6.008
DA → NE → TF	1.304	.110, 2.828	*-.292, 3.201*
SA → PE → TF	*-.670*	*-1.595, .015*	*-1.960, .275*
SA → NE → TF	-1.554	-3.165, -.435	-3.648, -.105
NFE → PE → TF	4.058	2.006, 7.283	1.462, 8.322
NFE → NE → TF	3.319	1.426, 6.659	.766, 6.659
Self-concept as outcome			
Indirect effect	**b**	**95% C.I.**	**99% C.I.**
DA → PE → SC	.192	.120, .287	.099, .315
DA → NE → SC	.040	.003, .092	*-.009, .124*
SA → PE → SC	*-.039*	*-.085, .009*	*-.104, .022*
SA → NE → SC	-.048	-.103, -.005	-.132, -.005
NFE → PE →SC	.261	.146, .427	.112, .456
NFE → NE → SC	.104	.037, .196	.020, .229

Note. Bias corrected confidence intervals were calculated with bootstrap option in Mplus (n=2000); values in italic are not statistically significant

DA=deep acting, SA=surface acting, NFE=naturally felt emotions, PE=positive emotions, NE=negative emotions, TSE=teacher self-efficacy, CK=content knowledge, TF=teacher as facilitator, SC=self-concept

The results presented in Table 2 indicate that only six indirect effects cannot be considered statistically significant, namely indirect effects of surface acting on teacher self-efficacy, teacher as facilitator and teacher self-concept via positive emotions, and indirect effects of deep acting, surface acting and naturally felt emotions on content knowledge via positive emotions. These results are in line with nonsignificant path from surface acting to positive emotions in all three models as well as with nonsignificant path from positive emotions to content knowledge in model with foreign language teacher self-efficacy.

In sum, the results of mediation analyses showed that teachers' emotions indeed mediate the relationship between emotional labor strategies and motivational beliefs. Deep acting and naturally felt emotions are positively related to positive emotions which are, in turn, positively related to most analyzed motivational beliefs. In contrast, surface acting is positively related to negative emotions which, in turn, are negatively related to teachers' motivational beliefs. Finally, the strategy of naturally felt emotions was negatively related to negative emotions, suggesting that naturally felt emotions may help to reduce the intensity of negative emotions and therefore preserve teacher motivation.

CHAPTER 5: DISCUSSION

5. Discussion

The purpose of this study was to explore the relationship between second language teacher motivational beliefs, the emotions teachers experience when teaching and interacting with learners, as well as emotional labor strategies they use to regulate their emotions. Furthermore, another aim of this study was to examine the role emotions and emotional labor strategies have in explaining different motivational facets of Croatian teachers of English, such as teaching self-efficacy and self-concept.

5.1. General Findings

5.1.1. Results of the Qualitative Analysis

The findings of the qualitative phase of research uncovered interesting aspects of the teachers' emotional experiences and motivational beliefs related to their learners, as well as classroom practices. The teachers in this study reported a variety of pleasant emotions, among which satisfaction, enjoyment, joy, pride, and enthusiasm were among the most frequent ones. Each of the emotions was caused by a host of varied antecedents. The general causes of pleasant emotions will be discussed in the segment on the same topic. The pleasant emotions listed earlier were also reported by other researchers, such as Becker et al. (2015), Hargreaves (2000), Lee et al. (2016), Frenzel et al. (2009), and Frenzel (2015), Khajavy et al. (2018), Sorić et al. (2015), Pekrun et al. (2018), and others. To briefly exemplify, enjoyment was the most reported positive emotion by primary and secondary school teachers, according to Frenzel and colleagues (2009). The findings of this study show it to be the second most experienced among the Croatian teachers of English. Other emotions, such as pride and enthusiasm, were also mentioned in regards to its frequency of occurrence, among other things, by secondary school teachers in the U.S. (Taxer & Frenzel, 2015). When it comes to the EFL context, Khajavy and colleagues (2018) reported teacher enjoyment and pride as prominent positive emotions.

As far as unpleasant emotions are concerned, the teachers in this study revealed experiencing frustration, irritability, disappointment, sadness, anger, and boredom, to mention a few. These emotions were among the most notable ones; moreover, they were reported in several studies that focused on teacher emotions and emotion management, such as Hargreaves (2000), Lee et al. (2016), Taxer and Frenzel (2015), Khajavy et al. (2018), Sorić et al. (2015), Pekrun et al. (2018), Stephanou et al. (2013) and others. Anger seems to be among the most prominent emotions experienced by teachers in general (Pekrun et al., 2018; Burić & Frenzel, 2019). Research carried out by Taxer and Frenzel (2015) showed that negative emotions, such as disappointment, anger, or boredom are common and that they have a detrimental effect on teachers' emotional well-being. This was also confirmed by Stephanou and colleagues (2013) who stated that teachers experience a variety of unpleasant emotions, such as anger, hopelessness, unhappiness, or boredom in the classroom and those emotions impact their performance directly. Interestingly, although anger (alongside other unpleasant emotions), seems to be quite pervasive among teachers, it did not emerge as one of the most frequently occurring negative emotions in this study.

In addition to the emotions listed, it is important to address their antecedents. Starting with the pleasant emotions, it was found that the majority of the causes were student-related. In other words, students' success in class, their display of knowledge, their positive feedback to teachers, good rapport, and their performance (e.g. oral presentations) were the most recurrent causes that were tied to different emotions, such as teacher satisfaction, enjoyment, joy, pride, relief, and others. A smaller portion entailed teacher-related causes, such as teacher success, positive learning environment, and teaching content, such as interesting topics or texts. Some of these sources of positive emotions are similar to those reported by other studies. For instance, Becker and colleagues (2015) listed class motivation and discipline as lead causes of teacher enjoyment. This was supported by Hargreaves (2000) who reported that teacher satisfaction stemmed from favorable classroom relations. Similar findings were also found in a study carried out by Khajavy and colleagues (2018) who stated that students' positive reactions, their progress, as well as their display of motivation were the main causes of foreign language teacher enjoyment and pride. Sorić and colleagues (2015) conducted a study focusing on teachers' emotions and their respective sources. Their results indicated that teachers' pleasant emotions can also be traced to students, that is, student success, effort, motivation, and positive relations with peers.

With regards to the sources of unpleasant emotions, the findings of this research showed that emotions such as frustration, irritability, disappointment, sadness and others, were predominantly instigated by student-related causes. To illustrate, students' disruptive behavior, lack of interest, effort, or motivation, lack of knowledge, and negative outcomes were among the most frequent precursors of negative emotions among the teachers. Akin to the section above which focused on the causes of positive emotions among teachers, a smaller percentage of negative emotions belongs to teacher-related causes, including reasons such as lack of preparation, having one's competence questioned by a student, or teaching-related, which encompasses repetition of the teaching content and testing. When it comes to other researchers, Hargreaves (2000) found that students are primary causes of teacher frustration and anger. The author found that elementary school teachers experience these emotions due to difficult and uncooperative students who do not conform to the pre-set guidelines, those that mock the teachers, or those that complain about being bored in class.

Moreover, Khajavy and colleagues (2018) suggested that the antecedents of unpleasant emotions in their study, such as anxiety, anger, boredom, and shame were caused by students' disciplinary issues, as well as their lack of motivation and collaboration. The authors mentioned some teacher-related sources, for instance, teachers' inability to provide the answers caused feelings of anxiety and shame, while their having to repeat the same thing several times instigated anger toward the learners. Sorić and colleagues (2015) found similar results in their study. In their study on Croatian teachers' emotions and emotion regulation strategies, it was shown that unpleasant emotions are tied to bad discipline, students' bad manners, and low interest in class. One of the more interesting unpleasant emotions was teacher boredom. This study linked teacher boredom to overseeing exams, repetition of teaching content, and test revision. Other research studies, such as the ones carried out by Khajavy et al. (2018) and Dumančić (2018) Sorić et al. (2015) showed that causes of L2 teacher boredom were also student-related, as teachers get bored when they observe their students' unresponsiveness or lack of motivation in the classroom.

The following segment pertains to the classroom activities reported by the teachers. Namely, the results of the teacher diary revealed a variety of classroom activities intersecting with both pleasant and unpleasant emotions. The most frequent among them were grammatical activities, oral (speaking activities), oral examinations, text-related (reading) and vocabulary-related activities. To briefly illustrate, grammatical activities are considered an indispensable aspect of foreign language teaching and they can serve as emotional triggers for both learners and teachers. Teachers may, for instance, feel satisfaction in witnessing their

learners' proper usage of some tense, or they may experience anger after realizing their learners have not yet mastered some basic grammatical rules. A study carried out by Jean and Simard (2011) set out to investigate L2 students' and teachers' beliefs about grammar teaching and related activities. Their findings pointed more toward the unpleasant emotional spectrum; moreover, the mechanical nature of grammatical tasks did not seem particularly appealing to the students. Teachers shared similar views and believed the students held a similar disposition. They also noted that grammar teaching was necessary. Speaking activities were second most frequent among the Croatian teachers of English in this study. They were tied to positive emotions, such as pride after observing students' originality in their oral presentations, as well as negative emotions, for instance, disappointment after realizing that some of the students were talking while their peers were presenting. Pishghadam and colleagues (2016) carried out a study that aimed to investigate the relationship between the four major language skills (reading, writing, speaking and listening) and EFL learners' emotions in class.

When it comes to speaking, the authors suggested this skill was primarily associated with feelings of pride and enjoyment. Furthermore, they stated that speaking seems to be that enjoyable may rest in the fact that learners are interested in it and their interesting ideas and creativity can be best expressed through that channel. The findings also revealed that unpleasant emotions, such as boredom or hopelessness, are least likely to emerge while being engaged in oral activities. In terms of text-related activities, the teachers in this study reported a variety of tasks, such as reading comprehension tasks, cloze text, genre analysis, and others which were associated with positive emotions. For example, feelings of satisfaction were experienced after seeing how interested the learners were in some topic, or pride was felt following a successfully completed reading task done in groups. Pishghadam et al. (2016) found that the development of reading skills through reading activities is a neutral entity. According to the findings, reading may cause both pleasant and unpleasant emotions. The authors suggested that reading, unlike listening and writing, does not evoke boredom among the learners. Furthermore, in the case of language learning in Iran, the learners are given stories about real life events, tourist attractions, even celebrities. These aspects, alongside the visual elements in the books, promote the learners' interest in the skill (reading).

The upcoming section will focus on findings pertaining to emotion regulation strategies used by the teachers in this study. According to the findings, a plethora of strategies was noted in relation to/transecting both pleasant and unpleasant emotions. Starting with pleasant emotions, the teachers did not regulate them as much as unpleasant ones. This finding is similar to the research conducted by Gong et al. (2013), who found that 74% of Chinese teachers in their study down-regulated negative emotions, as opposed to up-regulated (expressed) positive emotions (65%), and Jiang et al. (2016), whose respondents attested to the same thing. The findings from this study show that the Croatian teachers primarily engaged in down-regulation (which is a form of suppression) when faced with pleasant and/or unpleasant emotions. This corresponds to the findings reported by Gong et al. (2013) and Jiang et al. (2016). Other frequently used strategies include suppression, talking to somebody, and reappraisal.

A somewhat similar situation was observed in regards to unpleasant emotions; namely, the teachers in this study reported using the strategy of reappraisal the most, followed by other strategies such as deep breathing, down-regulation, suppression, talking to someone, and other less frequent examples, such as counting to ten. We can note certain recurring strategies across both positive and negative emotions, for instance, suppression, talking to someone, reappraisal, attentional deployment, and so on. To briefly exemplify, when it comes to pleasant emotions, some teachers resorted to down-regulation and suppression to retain their professional demeanor and not to appear overly emotional. These same strategies were utilized to combat the ill-effects of unpleasant emotions, such as frustration or sadness; moreover, the teachers attempted to reduce their effect so they could remain professional and not lose control in front of their learners. Another commonly used strategy related to both types of emotions was talking to somebody. In the case of positive emotions, the teachers reported experiencing emotions such as pride and wanting to convey it to their colleague. That act made the teacher feel good and it made the emotion last longer. With regards to negative emotions, the intended effect was the opposite. The teachers turned to someone, usually one of their trusted colleagues, for advice on how to handle a difficult, student-related situation, and attempted to process unpleasant emotions at the same time.

Other emotion regulation strategies that cropped up in the qualitative analysis were reappraisal, attentional deployment, and deep breathing. Interestingly, their usage varied with regards to the emotion experienced. To elaborate, while attentional deployment was more frequent in situations when pleasant emotions were experienced, it was among the least frequent ones in the negative emotions group. Furthermore, the situation with reappraisal was

different; namely, it was among the least used strategies pertaining to pleasant emotions and the most used in reference to unpleasant emotions. When asked to elaborate on the use of these strategies, the teachers revealed that attentional deployment in connection to pleasant emotions was used when positive emotions were evoked by something interesting (e.g. topic related to traveling) and they started thinking about their own travelling plans. If we took reappraisal as an example and looked at it through the prism of unpleasant emotions, such as anger or disappointment, we would notice that teachers mainly used it to focus on other aspects of their learners' persona so as to mitigate the undesirable effects of these emotional episodes. A teacher may be disappointed by a student's lack of knowledge or progress and remind themselves, for example, that they are still young, in their first year, and have enough time to become better. Lastly, deep breathing was another prominent strategy in relation to unpleasant emotions. The teachers resorted to it in attempt to regain composure and dissipate the anger or frustration building up in them.

The strategies reported by Croatian teachers were also reported by other research, such as studies carried out by Burić et al. (2016), Akbari et al. (2017), Chahkandi et al. (2016), Gong et al. (2013), Sutton (2004), Tejeda et al. (2016), Ghanizadeh and Rayoei (2015). The strategies reported by said authors, as well as the author of this study, correspond to Gross's (1998; 2015) classification of emotion regulation strategies. Gross classified the strategies into *antecedent* and *response-focused*. The first group comprises of strategies such as situation selection, situation modification, attentional deployment, and cognitive change. The latter group, on the other hand, showcases response modulation strategies that impact the behavioral, physiological, and experiential aspects of the emotional episode. Here, we can note strategies such as deep breathing techniques, and expressive suppression. To illustrate within the context of the present research, suppression, as denoted in the case of both pleasant and unpleasant emotions, can be placed under a response modulation category (Gross, 1998, 2015). Another prominent strategy mentioned by the Croatian English L2 teachers in this study was talking to someone (e.g. a colleague). This example can be classified as up-regulation if a teacher aimed at prolonging the positive effects of a pleasant emotion (Quoidbach et al., 2010), or down-regulation if they wanted the negative effects of anger or frustration to subside (Gross et al., 2006).

Attentional deployment was tied to both pleasant and unpleasant teacher emotions in this study. Thiruchselvam et al.'s (2012) study on selective attention in order to regulate emotional responses among Stanford university students showed the use of distraction as a widely known facet of this strategy. Teachers in general tend to distract themselves by redirecting their focus on other aspects of a given situation so they could reduce the emotional impact. Furthermore, Croatian teachers in this study also attested to falling back on deep breathing or counting to 10 when faced with unpleasant emotions. Gross classifies these as response modulation strategies considering that teachers find themselves in situations where they need to inhibit the inner emotional processes so they could maintain their professional attitude and ensure the quality of teaching. Burić and colleagues (2016) also reported that the strategy of deep breathing was used by teachers in their study, as well as some other response-focused strategies, such as venting (which include yelling, talking, or crying). Gong and colleagues (2013) reported that Chinese teachers use response modulation strategies most often in class (85%), followed by cognitive change strategies (62%).

Teacher motivational beliefs were another important component of the qualitative part of this research. The teachers in this study were asked about their ideal teacher self-images after each working day, as well as their perceived self-efficacy beliefs related to teaching. The first segment will address the ideal teacher self-images obtained from the teacher diaries. According to the results, eight distinct ideal teacher self-concepts emerged and they were all connected to different emotions. In order of frequency, they were as follows: 1) The Evolving teacher; 2) The Successful Teacher; 3) The Competent Teacher; 4) The Motivated and Motivating Teacher; 5) The Positive and Optimistic Teacher; 6) The Emotionally Intelligent Teacher; 7) The Confident Teacher; and 8) The Pessimistic Teacher. Many of these images were linked to teachers' professional life. While the image of an evolving teacher reflected the goal of improving one's teaching abilities, techniques, etc., the image of a successful teacher revealed a desire to be able to promote student achievement, good results, display of knowledge and acknowledgment. In terms of emotions, the image of the evolving teacher was mentioned in regards to satisfaction, joy, pride, enthusiasm, relief, disappointment, anxiety, empathy, sadness, and powerlessness. On the other hand, the image of a successful teacher was linked to satisfaction, frustration, joy, pride, enthusiasm, relief, disappointment, love and affection, irritability, and boredom.

The image of a competent teacher pertained to the goal of having expertise in choosing the right tasks, and constructing valid tests. It was tied to different emotions, such as satisfaction, frustration, enjoyment, joy, pride, empathy, sadness, irritability, and boredom. The essence of these ideal teacher selves was also observed in studies by several researchers. For instance, when developing a model of teachers' possible selves in Iran, Dastogoshadeh (2018) constructed a survey for EFL teachers that focused on concepts such as teachers' career identity, engaging in reflection, doing the work professionally, and utilizing modern technology. These can be tied to the image of a competent teacher since a certain degree of competence is required for a teacher to opt for the most appropriate means of instruction, as well as to reflect on their appropriateness. Babanoglu's (2018) research on pre-service EFL teachers in Turkey showed professionalism to be a prominent facet of teachers' future teacher self. In other words, teachers' future selves were tied to aspirations of being successful in teaching, well-organized, fair, and consistent with learners. Similar findings were found in Kubanyiova's (2015) longitudinal study whereby the EFL teacher she studied (Tamara) admitted that her goal was to become a teacher who is highly competent, well-organized, someone who is a primary source of information, and someone who is in charge of the teaching process. These goals are similar to two images that emerged from this study, namely teacher visions of themselves of becoming successful and competent teachers.

The following ideal teacher self-images to be discussed are those of the motivated/motivating teacher, the emotionally intelligent teacher, as well as the confident, and pessimistic teacher. The image of a motivated/motivating teacher denotes two aspects of a teacher's persona: first, it depicts a teacher who is motivated by the desire to learn more, the positive attitude toward teaching, while the second facet describes a teacher that is a facilitator, engages students, prompts them to act, think, express their creativity. The image of a motivated/motivated teacher was connected to teacher satisfaction, frustration, joy, pride, enthusiasm, relief, disappointment, anger, and boredom. These traits were also noted by Dastogoshadeh (2018), in his study focused on investigating the various types of EFL teachers' possible selves, who listed a number of images that pertain to teacher self-efficacy and coincide with the ones above, for instance, aiding learners in their attempt to master various language skills, utilizing different assessment strategies, motivating learners and fostering their self-expression (developing their voice). The author also made a reference to several teacher self-concepts that might correspond to the image of emotionally intelligent teacher reported in this study.

To elaborate, Dastogoshadeh proposed a ‘self-image’ category that envelops images of a teacher that is good at being a morality guide, one that strives to better one’s self, as well as one that is an authority in their field. Teachers in the present study described an emotionally intelligent teacher as a reflective individual who is aware of not only their own, but also their learners’ emotions. Moreover, this emotionally intelligent teacher is someone who fosters emotional expression in themselves and among learners, and wants to serve as an example of how to manage emotions properly. The participants in this study related this image to several different emotions, for instance satisfaction, frustration, joy, pride, enthusiasm, relief, empathy, sadness, love and affection, irritability, and powerlessness. Though the image of a confident teacher might also be related to the ‘self-image’ category, it could also be tied to Hiver’s (2013) study on Korean EFL teachers. To specify, the study in question placed future teacher self-images into two categories: 1) the self as an expert language user; and 2) the self as an expert teacher.

When asked about the ‘self as a teacher’, the respondents’ answers were focused on proficiency, rather than identity. Several emotions were mentioned in relation to this image: satisfaction, pride, and disappointment. Croatian teachers of English put forth an image of a confident teacher as an individual that emits confidence in both their own and their students’ abilities. This could be interpreted in the context of Hiver’s results, namely seeing oneself as a teacher that is confident in their language faculties, as well as their teaching ones (such as using proper instructional strategies, managing the classroom, and other). Lastly, the image of a pessimistic teacher appears to be less common in the literature. Several English L2 teachers in this study described it as an image portraying a teacher that is considering leaving the teaching profession. The image can be observed through the lens of Raynor’s (1974) ‘contingent path’ which states that immediate success engenders additional opportunities and future success, while immediate failure leads to failure in future endeavors. In light of the teachers in this study, they may have observed a disruption in their ‘contingency path’, which would explain why they felt demotivated and believed they would fail in their future career. Furthermore, the image was tied to emotions, such as anger and anxiety.

Indications of teachers aiming to or considering leaving the teaching service was observed in Rahmati and colleagues' (2019) study on language teacher vision and were tied to motivation to teach English. To illustrate, the authors interviewed 10 EFL teachers from the Iranian language education context in the qualitative phase of their research and found that two of the teachers reflected on quitting the profession. One, designated as 'Interviewee 7' confirmed that they wanted to leave the teaching profession, while another, labeled 'Interviewee 10' said that they would change jobs if the opportunity arose. Swanson and Huff's (2010) study also made a reference to the identity of teachers that wished to leave the teaching profession. A small number of teachers (11) stated they would be leaving their profession. Interestingly, ten of them were female teachers of Spanish (ages 24-27) and one was close to retirement. The authors examined the relationship between teacher attrition and self-efficacy and discovered that the teachers who were going to quit their profession portrayed low levels of self-efficacy.

The last segment of the qualitative phase pertained to the teachers' self-efficacy beliefs, or their perceived confidence in their ability to teach. The teachers in this study were asked to rate their confidence in their teaching abilities at the end of every working day. While writing in their diaries, teachers were asked to take other elements into consideration, such as emotions and classroom activities associated with these images. According to the results, the majority of English L2 teachers partaking in this study revealed high levels of teaching self-efficacy. This was the case when they experienced both pleasant and unpleasant emotions. To exemplify, in the case of pleasant emotions, such as satisfaction, enjoyment, joy, pride, or enthusiasm, the teachers' high levels of teaching self-efficacy were primarily linked to grammatical activities, students' presentations, oral examination, written assignments, and speaking activities. This indicates that Croatian teachers' confidence to teach was boosted when they experienced positive emotions owing to their students display of knowledge (e.g. successfully completing some grammar task), their show of language and presentation skills during oral reports, and other similar situations.

Following these types of scenarios, the teachers used the phrases 'quite/pretty confident' to describe their teaching self-efficacy. When it comes to unpleasant emotions, less than half the teachers stated that they appraised themselves as highly confident in their teaching abilities. They revealed experiencing emotions such as frustration, disappointment, and irritability in connection to grammatical activities, testing, and oral exams. Even though the teachers reported experiencing negative emotions, they still retained the confidence in their teaching abilities.

To illustrate, some teachers felt frustrated or disappointed after seeing their students' poor results or observing their lack of effort and motivation; however, they were still confident enough to persist in their teaching efforts.

High levels of perceived self-efficacy among teachers was also reported by Agcam and Babanoglu (2016), Ghasemboland (2014), Thompson (2016), Swanson (2013), and Yilmaz (2011). Agcam and Bablou's (2016) study on a sample of 100 primary school teachers (both novice and experienced) in Turkey showed that the majority of respondents displayed high levels of teaching self-efficacy. Specifically, a difference in gender was portrayed, showing male teachers to be more confident in their ability to maintain the classroom discipline, motivate students, and face everyday challenges compared to female teachers. Ghasemboland (2014) reached a similar conclusion after carrying out a study among 187 EFL teachers working in various notable language centers in one Middle East country in Asia. The results of the study revealed high levels of teaching efficacy across three factors of self-efficacy: instructional strategies, classroom management, and student engagement (the highest appraisal being in classroom management). The author elaborated that the results obtained could have been due to the fact that the teachers had been employed by renowned language centers and the teachers working there may have considered themselves to be among the best.

Thompson's (2016) study among 141 Japanese EFL high school teachers identified five factors of teacher self-efficacy: 1) Using English; 2) Communicative teaching; 3) Teamwork; 4) Student Achievement; and 5) Managing Workload. Japanese teachers' efficacy beliefs were the strongest in relation to using English and student achievement (e.g. teacher's ability to foster student learning, help them increase proficiency, get into university, etc.). When looking at the L2 teachers in this study, their reported high levels of teaching efficacy can be traced back to students' accomplishments as well as their own successes (e.g. successfully held presentation), display of knowledge (oral examination or grammatical activities), verbal prowess (speaking activities), and so on. This is similar to the findings outlined in Thompson's study, particularly since the factors mentioned in that study did not reflect the respondents' beliefs about the dimensions of challenge (e.g. instructional strategies) in general, but those that are more geared toward fostering communication and knowledge.

Moderate levels of teaching self-efficacy were found which constituted the second most frequent group according to the qualitative results. The teachers appraised their confidence in teaching as average, for example, as “3 out of 5” or “I’d give myself a C” and their assessment was made in connection to different classroom activities and emotions. For instance, when it comes to pleasant emotions, such as satisfaction, joy, enjoyment, and empathy, the teachers tied their self-assessment to student projects/workshops, class discussions, pair work/group work activities, and exam revision. Namely, teachers’ moderate appraisal of their teaching abilities was related to students’ projects which were accompanied by positive emotions; however, they still remained cognizant of some things that could have been done differently or improved upon. Despite experiencing a positive emotion such as joy, some of them felt uncertain as to whether the students would be able to handle everything on their own, or they became aware of the things that should have been prepared in advance.

With respect to negative emotions such as frustration, disappointment, boredom, and irritability, the teachers that assessed themselves as moderately efficacious and related their appraisal to several classroom activities, including grammatical activities, testing, and student presentations/workshops. To illustrate, some teachers reported feeling frustrated after seeing a group of students disrupting the class when everyone was working on grammatical exercises. The teachers’ moderate confidence could have been due to the fact that they managed to get the job done (majority of the students finished their work successfully), despite being aware that there were some things they could have done differently to avoid disruptions in the classroom.

Several scholars reported moderate levels of teacher efficacy in the results of their studies, including Chacon (2005), Kostić – Bobanović and Grgić (2016), Zakeri and Alavi (2011), and others. For instance, Chacon (2005) aimed to investigate the perceived efficacy among a 100 EFL teachers in Venezuela. The author reported that the teachers appraised themselves as moderately confident in their abilities to provide adequate instructional strategies, control the classroom, and to foster student learning and classroom engagement. The lower results were tied to the listening and speaking, as well as to cultural knowledge. The teachers had expressed concerns pertaining to spoken English. Another study was conducted by Kostić-Bobanović (2016) and it involved 74 language teachers at University of Pula in Croatia (they taught English, Italian, German, French, and Russian). According to the findings, the teachers attested to having moderately high self-efficacy beliefs pertaining to instructional strategies, classroom management, and student engagement. Teachers stated that they felt most efficacious in their ability to use various means of instruction, and least when

having to get the students engaged and interested in the subject matter. Somewhat similar results were reported by Zakeri and Alavi (2011) whose study focused on 55 novice EFL teachers in Iran who exhibited moderate levels of teaching self-efficacy across all factors. In contrast to the results of Kostić-Bobanović's (2016) study, Iranian teachers rated themselves as most efficacious when controlling the classroom and least when required to promote student learning and participation. Though Croatian teachers were not required to reflect on specific aspects of teaching self-efficacy, such as instructional strategies or classroom management, they revealed that certain lapses in organization, or enforcement of classroom rules contributed to their current self-assessment. Whether it be Croatian teachers' disappointment with their students' lack of involvement and attention during their peers' presentations or disruptive behavior while solving grammar-based tasks, the findings of the present study can be interpreted through the prism of student engagement, classroom management, or instructional strategies, as reported by the authors above.

Lastly, L2 teachers with low levels of perceived teaching self-efficacy were the smallest and least frequent group in this study. The teachers in this group described themselves as "less confident than usual" or "not very confident. When asked to relate their self-appraisals to specific emotions and classroom activities, they revealed a single positive emotion (joy) and two activities (classroom observation and grammar revision). On the other hand, several negative emotions were reported, for example, frustration, sadness, irritability, and powerlessness, which were also associated with two activities (entering students' grades into the class register and grammatical activities). To briefly explain, one of the teachers' low estimate of their teaching abilities may have been impacted by the teacher's inability to administer the right tasks for the learners (suitable in level of difficulty, nothing overly easy that would detract the learner from participating), or their inexperience in dealing with difficult students. These reports were collected after the teachers' day at work and as such should not be generalized. Still, the examples they provided correspond to self-efficacy categories (e.g. instructional strategies), as proposed by Tschannen Moran and Woolfolk Hoy (2001).

5.1.2. Results of the Quantitative Analyses

The descriptive analyses yielded interesting results in relation to the teachers' teaching self-efficacy, self-concept, experienced emotions and emotional labor strategies used in class. Croatian L2 English teachers that partook in this study exhibited moderately high levels of teaching self-efficacy when compared to the TSES theoretical range that describes how confident the teachers are in their abilities. To specify, they appraised themselves as most confident when it comes to their ability to use proper strategies for instruction, assessment, etc., while the lowest result was noted in the area of student engagement, which implied helping students value learning, motivating them, and so on. When asked about their ability to control the classroom, instill rules and deal with disruptive students, they believed they had some influence in the matter (which would imply a moderate level of self-efficacy according to the scale range).

Croatian teachers revealed high confidence in their language abilities, for instance, being able to carry on conversation with a native speaker, to express themselves in written form (e.g. letter to a friend), to fully understand a foreign movie, and so on. A somewhat lower level of confidence was observed in relation to their ability to foster students' interest in learning, help them learn at the highest level, improve their achievement, and similar. The determination of the teachers' confidence was made based on the FLTES theoretical range. It would seem that Croatian teachers show more security in their knowledge and expertise and less when it comes to student-related factors, such as effort and motivation. In addition, they expressed higher levels of confidence in their language expertise than their ability to engage students and foster their language learning.

In regards to teacher self-concept, the results showed that Croatian L2 English teachers in this study showed a moderately clear vision of themselves as EFL teachers. The findings were interpreted according to the Self-Concept Scale range. In other words, they have a somewhat distinct perception of who they are, who they aspire to become (in accordance with the goals they set out for themselves), and what it is that they wish to avoid becoming. It is necessary for teachers to manage their behavior in line with their future image of themselves; in other words, teachers direct their demeanor toward the goals and outcomes they desire (Hamman et al., 2013). Also, having thoughts about the future is tied to their behavior in the present (Hoyle and Sherill, 2006; Harris, 2011).

Teacher emotions were also analyzed in the descriptive analysis. The results showed that the teachers in the study experience pleasant emotions more frequently than unpleasant ones. Furthermore, among the positive emotions, such as joy, pride, and love, joy was the most highly rated pleasant emotion, while love was the lowest. This would indicate that Croatian teachers experience joy most often when interacting with students and teaching in general. They also experience pride, but somewhat less frequently. When it comes to their displays of love, the teachers were a bit ambivalent. This finding might indicate that they do experience the emotion, but infrequently. Regarding unpleasant emotions, the results revealed fatigue to be the most prominent negative emotion among Croatian L2 English teachers, followed by hopelessness, and anger. It should be noted that the teachers stated that they do not experience these emotions very often. Fatigue may have been the most notable emotion due to everyday demands and stress usually attributed to the teaching profession. This is particularly observable at the end of a working day, after dealing with children. Anger, on the other hand, was the least experienced emotion, though some authors (e.g. Pekrun and colleagues, 2018) claim it to be the most observable negative emotion among teachers.

Lastly, the teachers' use of emotional labor strategies was also analyzed. According to the results, L2 English teachers stated that they engage in the display of naturally occurring emotions most frequently. Also, they sometimes resort to deep acting or attempting to evoke the desirable emotions in the classroom, and rarely in surface acting or pretending to experience emotions that do not exist. Teachers that engage in surface acting, for instance, are more likely to experience unpleasant emotions, such as frustration or anxiety (Lee & van Vlack, 2017). Deep acting, on the other hand, is positively related to pleasant emotions, meaning that teachers are more likely to experience enjoyment (Lee et al., 2016). Teaching as a profession is subject to its own set of display rules, for instance, being aware of which emotions are (un)acceptable in the classroom, and teachers, who are affected by social and cultural norms, have to choose the best (emotional labor) strategies (Winograd, 2003). According to the study carried out among 1281 Chinese teachers by Yin et al. (2013), teachers prefer to express their natural emotions without inhibition, which is also what the findings from this study revealed.

5.2. Validation of Hypothesis 2a

The first (1a) hypothesis predicted that teachers who report experiencing higher levels of pleasant emotions would display higher levels of teacher self-efficacy and self-concept. Moreover, the hypothesis also predicted that the teachers' self-efficacy and self-concept levels would be higher if they used deep acting to regulate their emotions.

Relationship between positive emotions and teacher self-efficacy. When it comes to the relationship between positive emotions and self-efficacy, positive emotions in this study were mainly positively correlated with the factors pertaining to teachers' self-efficacy beliefs. To explain, positive and statistically significant relations were observed between joy, pride, and love, and all three aspects of general teaching efficacy, namely instructional strategies, classroom management, and student engagement. This result would imply that teachers who experience positive emotions, in this case joy, pride and love, exhibit higher confidence in their ability to utilize appropriate instructional strategies while teaching, properly control the students' behavior in the classroom, as well as activate their students by helping them value learning. A somewhat different situation can be noted in regards to foreign language teaching self-efficacy beliefs. The results of the study indicated a positive, statistically significant relationship between positive emotions and some factors of FLT self-efficacy. For instance, while joy correlated positively with both content knowledge and teacher as a facilitator, pride and love were only positively related to teacher as a facilitator. To elaborate, teachers that experience joy in class are more prone to having greater confidence in their language abilities, as well as confidence in their capacity to foster student learning and motivation.

Conversely, the results also demonstrated that teachers that experience pride in their students' accomplishments and show them love are more likely to believe they can facilitate their students' learning process and promote their success. The results were corroborated by Taxer and Frenzel (2015) who established a positive relationship between pleasant emotions and teacher efficacy, satisfaction, and well-being. For example, the authors claimed that emotions such as happiness, pride, enthusiasm, and liking have a strong association with self-efficacy beliefs. Moreover, teachers that frequently display positive emotions end up being more efficacious, satisfied and connected to their students. Burić and Macuka's (2017) study is in line with what has been stated thus far. Their research confirmed that teachers who exhibit higher levels of teaching self-efficacy report experiencing higher levels of pleasant emotions, such as joy, pride, and love.

Relationship Between Positive Emotions and Self-Concept. The results related to the relationship between positive teacher emotions and their self-concept showed positive and statistically significant correlations. The highest positive correlation was noted between pride and teacher self-concept, followed by love, and joy. This would suggest that teachers that have a clear concept of who they are and who they want to become are more likely to show pride in their students. The same line of reasoning can be applied in the case of the remaining two pleasant emotions; namely, teachers with clearly constructed images of themselves are bound to feel joy around their students, as well as show love toward them. Dörnyei and Kubanyiova (2014) discussed the importance of teacher vision and motivation at length. Their contention was that numerous factors are at work when a teacher's image or vision is being constructed. To illustrate, a teacher takes into account their previous experiences and their sensory experiences. They also need to self-reflect on their passions, talents, gifts, and past experiences to construct a clear and detailed vision of themselves. Though not directly, the authors stated that this process requires revisiting one's experiences and emotions (e.g. asking questions such as "How did you feel in the past that you were genuinely 'in your element'?") (Dörnyei & Kubanyiova, 2014, p. 127). The results of this study show that motivated L2 English teachers with a strong vision of their future self also experience positive emotions in class. Another interesting point made was that L2 education practice rarely takes into consideration teachers' talents and passions as crucial elements in the process of constructing an ideal teacher self-image. However, it appears that the teachers in this study have overcome these difficulties and have managed to create positive ideal teacher self-images.

Relationship Between Deep Acting and Teacher Self-Efficacy. According to the results, positive and statistically significant correlations were observed between deep acting and only one aspect of general teaching efficacy, namely student engagement. Other correlations were not significant. This finding indicates that teachers that engage in the deep acting will also be more confident in their ability to facilitate student learning and engage students in class. Moreover, with regards to foreign language teaching self-efficacy beliefs, a statistically significant positive relationship was discovered between deep acting and teacher as a facilitator. This bears some resemblance to the above mentioned finding as it also shows that teachers that try to arouse emotions that are adequate for their students and teaching (deep acting) will also be more confident in their capacity to get their students interested in the language learning, help them learn at the highest levels, and increase their achievement. Deep acting, on the other hand, did not have a statistically relevant relationship with the other

aspect of foreign language teaching self-efficacy, that is, content knowledge. In regards to other research, Yin and colleagues (2017) corroborated part of these findings. To elaborate, their study among 1115 primary school teachers from Hong Kong revealed a positive correlation between deep acting and all aspects of general teaching self-efficacy. According to the authors, teachers that expend effort into evoking student-appropriate emotions will also exhibit higher levels of confidence in their ability to use suitable instructional strategies, manage the classroom, and engage the students in class. Croatian teachers of English from this study, on the other hand, showed that that their confidence in promoting student learning is only related to how frequently they engage in deep acting. The results of Lee and van Vlack's (2017) study, though contrary to our findings, seem to partially go in line with Yin. Their study among 127 Korean EFL teachers demonstrated that deep acting had a positive influence on classroom management through enjoyment. They did not reflect on other aspects of teacher self-efficacy.

Relationship Between Deep Acting and Self-Concept. The findings of the correlation analysis pointed to a positive and statistically significant relationship between deep acting, as one of the emotional labor strategies, and foreign language teacher self-concept. To elaborate, teachers that have a vivid and clear vision of who they are as a teacher and who they aim to become are more likely to engage in deep acting when interacting with their students. As seen earlier in the qualitative section, teachers may have different visions of themselves. Teachers with a clear ideal, ought-to, or feared L2 teacher self-image will be more inclined to work hard at developing those emotions they need to show in front of their students. Schutz and Lee (2014) discussed teacher-related emotional episodes and their identities; furthermore, they acknowledged the importance that teachers' emotions, and by extension emotional labor, have in the teaching process. While teachers are aware that pleasant and unpleasant emotional episodes can have facilitative or adverse effects not only on their performance, but also student learning and motivation, they also recognize the need to uphold the professional rules of conduct. Emotional labor, then, has a direct bearing on the teachers' process of identity construction. In other words, feeling the need to/investing effort into displaying socially and professionally acceptable behavior can affect how teachers see themselves. Teacher identity is not fixed nor is it static. It changes in line with their self-perception, as well as their perception of the teaching profession. Schutz and colleagues (2007) stated that teacher identity encompasses the image teachers have of themselves, alongside the image they portray when dealing with their students. To briefly illustrate, one of the items from the

Foreign Language Teacher Self-Concept Scale pertaining to L2 teacher self-concept and professional expectations would be “I try to showcase a good mastery of English in every class so I do not lose my students’ respect”. The following example from the Emotional Labor Scale relates to the emotions the teacher believes they are supposed to exhibit in accordance with their profession:” I put on an act in order to deal with the students in an appropriate way”.

5.3. Validation of Hypothesis 2b

The hypothesis predicted that teachers who report experiencing higher levels of unpleasant emotions would display lower levels of teacher self-efficacy and self-concept. Moreover, the hypothesis also predicted that the teachers’ self-efficacy and self-concept levels would be lower if they used surface acting to regulate their emotions.

Relationship Between Negative Emotions and Teacher Self-Efficacy. The results of this study showed that anger, fatigue/exhaustion, and hopelessness are negatively associated with the majority of the tested aspects of teacher self-efficacy. To clarify, anger was negatively correlated with both general and foreign language teaching self-efficacy factors. In regards to the general one, the highest correlation was between anger and classroom management, followed by student engagement, and instructional strategies. As far as the latter type was concerned, the highest negative correlation was noted between anger and teacher as a facilitator. It can be concluded that Croatian L2 teachers that experience anger show less confidence in their abilities to select and use adequate instructional strategies, control the learners’ behavior, or to promote their participation in the learning process. Also, it can be stated that angry teachers are also not that assured in their capacity to foster their learners’ language learning, motivation, or knowledge of the subject matter. When it comes to fatigue/exhaustion, statistically relevant, negative correlations were only observed between two factors of general and one factor of foreign language teaching efficacy. According to the findings, the highest correlation was noted between fatigue/exhaustion and classroom management, then instructional strategies. No statistically significant correlation was perceived between the emotion and student engagement. Furthermore, fatigue was also statistically linked to a single aspect of foreign language teaching self-efficacy, that is teacher as facilitator.

These results can be interpreted in a way that Croatian L2 teachers that report being fatigued in class also admitted to having less confidence in their ability to manage the class and utilize proper means of instruction and assessment. Likewise, exhausted teachers appear to be less certain that they can promote their learners' learning process, and encourage them to be active and interested.

Lastly, negative statistically significant correlations were noticed between hopelessness and all aspects of general and foreign language teaching self-efficacy. To illustrate, when focusing on general self-efficacy, the highest correlation was noted between hopelessness and classroom management, followed by student engagement, and instructional strategies. Furthermore, in terms of foreign language teaching, the highest correlation was reported between hopelessness and teacher as facilitator, while the weaker correlation was tied to content knowledge. Based on the results, the findings indicate that Croatian L2 teachers who reported feeling hopeless at one point while teaching exhibited less confidence in their abilities to control the classroom, increase student engagement, use adequate methods to ask good questions, and provide alternative explanations. Similarly, hopeless teachers also reported being less confident in their capacity to help their learners learn English at the highest levels or even in their knowledge of the language.

Bandura (1997) discussed the relation between physiological arousal and appraisals related to self-efficacy. What is important is how individuals perceive and interpret their emotional and physiological reactions, rather than how intense they are. According to the author, the already existing beliefs pertaining to efficacy lead to attentional, interpretive, and memory biases when processing somatic input. To illustrate, people with panic disorders will appraise their self-efficacy as low, thus increasing their heart rate, blood pressure, and evoking terrible outcomes in their minds. More stable individuals, on the other hand, that experience the same increase in heart rate, will remain calm as they consider this somatic change to be harmless. The findings obtained in this research correspond to the findings reported by Burić and Macuka (2017). Their study among 941 Croatian teachers showed that teachers that admitted experiencing unpleasant emotions, such as anger, fatigue, and hopelessness, pertaining to their learners (during the first measurement) revealed being less engaged in their work (during the second measurement).

The authors also indicated that teachers with higher levels of teaching self-efficacy experience pleasant emotions, such as joy or pride, compared to unpleasant ones. Taxer and Frenzel's (2015) research findings are similar these; namely, they found that unpleasant emotions, such as disappointment and anger, have adverse effects on teachers' emotional lives. In addition, teachers that display unpleasant emotions frequently also attest to being less efficacious, satisfied, and healthy.

Relationship Between Negative Emotions and Self-Concept. All negative emotions examined proved to be negatively associated with teacher self-concept. Specifically, the highest statistically relevant, negative correlation was perceived between anger and teacher self-concept, followed by hopelessness, and fatigue. From this it can be gathered that Croatian L2 teachers that frequently experience anger do not have a coherent vision of who they are and who they aspire to become. This also pertains to teachers that experience hopelessness and fatigue; that is, such emotions have a detrimental effect on the teachers' emotional lives, well-being, motivation but also their visions of their future selves. According to Dörnyei and Kubanyiova (2014), one's vision does not solely encompass the cognitive aspect, but also the sensory element. The authors speak of "tangible images related to achieving the goal" (p. 10). Whether it be the learner's or teacher's, a vision has a motivational pull toward an envisioned future state. Markus and Ruvolo (1989) presented vision as a personalized goal; moreover, a person may set a specific goal for themselves, accompanied by a representation of how they advance toward it. As a result, it may be inferred that Croatian L2 teachers who reported having experienced unpleasant emotions, such as anger or fatigue, can attest to the fact that those emotional states can have an impact on how they perceive themselves as language teachers. As was observed in the teacher diaries, the negative emotions experienced had a direct effect on teachers' self-efficacy and ideal teacher self-image. Some teachers even admitted to having an unclear or negative vision of themselves after experiencing unpleasant emotions, but nevertheless stated that "tomorrow is a new day," thus indicating that they are aware that their current vision need not be permanent.

Relationship Between Surface Acting and Teacher Self-Efficacy. When discussing the relationship between surface acting and teacher efficacy, the results showed negative, statistically significant correlations between all aspects of general and foreign language teaching self-efficacy, expect one: content knowledge. To exemplify, in regards to general teacher efficacy, the highest significant correlation was observed between surface acting and classroom management, followed by student engagement, and instructional strategies. With respect to foreign language teaching self-efficacy, the only statistically significant correlation was perceived between surface acting and teacher as facilitator. To put the findings into context, it would appear that Croatian teachers of English who admitted engaging in surface acting often reported less confidence in their abilities to establish and enforce classroom management rules, engage the students and help them achieve success, as well as their capacity to provide suitable instructional strategies. Furthermore, the teachers that frequently masked their true emotions and acted in front of their students exhibited lower levels of confidence in their ability to promote their learners' interest in English and motivate them to learn about the language.

A study conducted by Yin and colleagues (2017) corroborates the findings outlined above in their research among 1115 primary school teachers in Hong Kong. Their findings show that surface acting, as one of the emotional labor strategies, was negatively associated with all three aspects of general teacher self-efficacy, namely instructional strategies, classroom management, and student engagement. Taxer and Frenzel (2015) discussed the relationship between teacher-employed emotional labor strategies and their emotional lives. More to the point, the findings of their study point to the negative effects faking or suppressing any kind of emotion has on teachers' well-being, for example bad physical health and emotional exhaustion. The authors mentioned disliking as one of the frequently hidden emotions; moreover, teachers that engaged in such practice reported a host of adverse effects, such as bad physical health, emotional exhaustion, distance from their learners, and low levels of teacher self-efficacy.

Relationship Between Surface Acting and Teacher Self-Concept. According to the correlation analysis, there was a weak negative and statistically insignificant relationship between surface acting and foreign language teacher self-concept. This finding would indicate that Croatian L2 teachers of English that reported masking or faking their true emotions did not have a clearly defined images of themselves as teachers. The finding at hand can be discussed in regards to Hoschchild's (1983) emotion dissonance theory which states

that tension arises when emotions felt differ from those that are displayed. This dissonance, according to the author, represents a threat to an individual's sense of self. Emotional dissonance that occurs among language teachers was discussed by Kubanyiova (2012). Though she did not refer to the emotional labor strategies specifically, she did note that a certain tension may arise due to a discrepancy between the language teachers' reality and vision. The teachers, as a result of this dissonance, may start feeling uneasy and thus motivated to self-regulate and alter their current situation (Dörnyei & Kubanyiova, 2014). It might be reasonable to assume, while taking into account what has been stated by Hochschild and Kubanyiova, that if teachers were to experience and mask feelings of uneasiness due to said discrepancy, their self-concept would suffer.

5.4. Validation of 2c Hypothesis

The hypothesis predicted that teachers who report experiencing higher levels of positive emotions would display higher levels of teacher self-efficacy and self-concept. Moreover, the hypothesis also predicted that the teachers' self-efficacy and self-concept levels would be higher if they used naturally felt emotions to regulate their emotions. Given that the relationship between positive emotions and teacher self-efficacy and self-concept have already been discussed in section 5.2., only relationships between naturally felt emotions and teacher self-efficacy, and self-concept will be presented.

Relationship Between Naturally Felt Emotions and Teacher Self-Efficacy. According to the results of the correlations analysis, positive and statistically relevant relationships were noted between naturally felt emotions and the majority of teacher self-efficacy constructs. Specifically, while positive correlations were observed in relation to all aspects of general teacher self-efficacy, naturally felt emotions only correlated with teacher as facilitator in the foreign language teaching segment. When focusing on specific findings related to general teacher self-efficacy, the highest significant correlation was perceived between naturally felt emotions and instructional strategies, only to be accompanied by student engagement, and classroom management. Based on this we can deduce that Croatian teachers of English that frequently engaged in open demonstration of their emotions showed higher levels of confidence in their instructional abilities, that is, their capacity to select the best teaching and assessment strategies. Akin to this, the teachers who show how they feel openly will be more likely to express more confidence in their abilities to promote their learners' achievement,

engagement, and will also manage the classroom better. With regards to the foreign language teaching self-efficacy, the results pointed to a positive, significant correlation between naturally felt emotions and teacher as facilitator. This would imply that L2 teachers who frequently exhibit their true emotions while teaching also feel more efficacious when it comes to their ability to foster their learners' interest in English, and help them learn. There was no statistically significant correlation between naturally felt emotions and content knowledge which means that the teachers' open display of emotions was unrelated to their self-perceived confidence in their L2 proficiency. Part of the findings can be corroborated by Yin and colleagues (2017) in their study among primary school teachers in Hong Kong. Namely, their study showed that genuine expression of emotions was positively tied to all three aspects of general teacher self-efficacy (instructional strategies, classroom management, and student engagement). Adversely, those same aspects were negatively correlated to surface acting. The authors also contended that surface acting was considered more dysfunctional when compared to deep acting, or genuine expression of emotions in the teaching profession.

Relationship Between Naturally Felt Emotions and Self-Concept. The final segment in the correlations analysis pertains to the relationship between naturally felt emotions and teacher self-concept. According to the findings of this study, statistically significant, positive correlations were noticed between naturally felt emotions and foreign language teacher self-concept. This would imply that Croatian L2 teachers who frequently engage in an open display of their emotions when teaching are also likely to have a vivid representation of their teacher selves. In other words, their vision will be more detailed and represented in the cognitive and sensory sense (Dörnyei & Kubanyiova, 2014). Furthermore, teachers' use of specific strategies and their self-concept are not disconnected. The possible selves theory ties agency to identity and suggests that an individual may resort to certain strategies in the process of attaining their goals, namely, trying to get closer to their ideal, and farther from their feared self (Conway, 2001). Identity, in this case, becomes agentic and agency is realized by means of acting and reflecting on oneself (Hamman et al., 2013). In that sense, Croatian L2 teachers chose which emotional labor strategies they utilized and their choice reflected on their well-being, as well as their self-concept.

The relationship between naturally felt emotions and self-concept can also be connected to Hoschchild's (1983) emotion dissonance theory; to illustrate, unlike surface acting, which has a detrimental impact on one's vision of self, naturally felt emotions does not create dissonance but consonance, which enables the person to experience and display genuine emotions simultaneously (Yin et al., 2013).

5.5. Validation of 2d Hypothesis

It was hypothesized that emotional labor strategies partially mediate the relationship between emotions and motivational beliefs. In other words, emotions contribute in explaining self-efficacy and self-concept directly, as well as indirectly, by means of emotional labor.

5.5.1. The Mediating Role of Emotional Labor Strategies in the Relationship Between Emotions and Teacher Self-Efficacy, Foreign Language Teacher Self-Efficacy, and Teacher Self-Concept

Three models were proposed to examine the relationship between emotional labor, emotions, and motivational beliefs. The first model showed that positive and negative emotions have a mediating role between emotional labor strategies and teacher self-efficacy beliefs. It was shown that all three dimensions of emotional labor had a direct impact on both positive and negative emotions. Specifically, deep acting and naturally felt emotions had a direct positive impact on positive emotions and negative direct impact on negative emotions. Conversely, surface acting had a direct negative effect on positive emotions and direct positive impact on negative emotion. The model also uncovered a direct impact of both positive and negative emotions on teacher self-efficacy. To exemplify, a moderate positive effect was noted between joy, pride, and love and teacher self-efficacy, while a strong negative effect was observed between anger, fatigue, and hopelessness and teacher self-efficacy beliefs. Teacher self-efficacy was indirectly affected by emotional labor strategies through positive and negative emotions.

The second model was proposed to investigate the relationship between emotional labor strategies, teacher emotions, and foreign language teaching self-efficacy. Similar to the first segment, positive and negative emotions acted as mediators between emotional labor strategies and two aspects of foreign language teaching self-efficacy, that is content knowledge and teacher as facilitator. Furthermore, when focusing on the relationship between

emotional labor strategies and teacher emotions, deep acting and naturally felt emotions had a strong positive relationship with positive emotions, while the same components had a negative impact on negative emotions. Meanwhile, surface acting was positively related to negative emotions and negatively to positive teacher emotions. There was no positive relationship between positive and negative emotions. Furthermore, teacher emotions were directly related to both aspects of foreign language teaching self-efficacy. To illustrate, there was a moderate positive relationship between positive emotions and teacher as facilitator. Furthermore, a weaker relationship was noted between positive emotions and content knowledge. On the other hand, a significant negative relationship was observed between unpleasant emotions and both aspects of foreign language teacher self-efficacy, namely content knowledge and teacher as facilitator.

The third model was proposed to investigate the relationship between emotional labor strategies, teacher emotions, and self-concept. According to the model, positive and negative emotions acted as mediators between emotional labor strategies and self-concept. Akin to the models above, a positive relationship was observed between deep acting, naturally felt emotions, and positive emotions. Both strategies were negatively related to negative emotions.

On the other hand, surface acting had a positive relationship with negative emotions, and a negative relationship with positive emotions. With regards to the ties between the emotions, the model revealed that positive emotions were negatively related to negative emotions. As far as the relations between the emotions and self-concept are concerned, positive emotions had a positive relationship with self-concept, while negative emotions had a negative relationship with the same construct. The findings reported in this section were corroborated and discussed by various authors, such as Burić (2019), Lee et al. (2016), Taxer and Frenzel (2015), Lee and van Vlack (2017), and Burić and Macuka (2017).

Burić et al.'s (2019) study proved that pleasant emotions, such as love and joy, had a positive effect on deep acting. On the other hand, unpleasant emotions, such as anger, had positive effects on surface acting. In other words, teachers that experience positive emotions more will resort to deep acting, whereas teachers that report experiencing stronger intensity of unpleasant emotions will resort to surface acting. This finding was also confirmed by Lee et al. (2016) in research that revealed positive relations between enjoyment, reappraisal and deep acting. Furthermore, the authors also pointed to positive correlations between anxiety, anger, frustration, and suppression as well as surface acting. As far as naturally felt emotions

are concerned, they were addressed in a study carried out by Taxer and Frenzel (2015). The results revealed a positive relationship between positive emotions and genuinely expressed emotions, which are one aspect of emotional labor strategies. Namely, the authors stated that the teachers in their study most frequently and genuinely displayed emotions such as pride, liking, happiness, and enthusiasm. Interestingly, they also reported hiding emotions such as happiness, disliking, and anger.

Another study that highlighted a positive relationship between deep acting with positive emotions (such as enjoyment and pride) and surface acting between negative emotions (such as anxiety and frustration) was the one conducted by Lee and van Vlack (2017) among Korean English language teachers. An interesting exception was found in the study conducted by Burić (2019). Namely, the author found a positive relationship between one aspect of surface acting and positive emotions, in this case enthusiasm, on a sample of 90 Croatian high school teachers and their 2019 students. Specifically, faking emotions was shown to facilitate teacher performance, evoke learner enthusiasm, and ensure positive outcomes. The study also stressed the fact that deep acting and hiding emotions (as part of surface acting) do not predict teacher enthusiasm.

Burić and Macuka (2017) indicated positive relations between teacher self-efficacy and pleasant emotions and negative relations between self-efficacy and unpleasant emotions. To illustrate, teachers that reported feeling joyful, proud, or showing love toward their learners had higher levels of teacher self-efficacy. On the contrary, teacher self-efficacy was lower among those teachers who reported experiencing intense anger, fatigue, or hopelessness. Such teachers, for instance, ended up revealing some adverse effects, for instance lower engagement when teaching. Lee and van Vlack (2017) also showed emotions to be mediators between emotional labor strategies and one aspect of teacher self-efficacy, namely classroom management. The results of their study were interesting in that they indicated enjoyment and anger to be positively correlated with classroom management, and frustration to be negatively associated with it. The authors suggested that the positive correlation must have been due to the display rules of the teaching profession; moreover, teachers felt that showing anger might be inappropriate behavior.

CHAPTER 6: CONCLUSION

6. Conclusion

The aim of this study was to examine the relationship between L2 teacher motivational beliefs, the emotions teachers experience when teaching and interacting with learners, along with emotional labor strategies they use to regulate their emotions. In addition, this study also set out to explore the role emotions and emotional labor strategies have in explaining different motivational facets of Croatian teachers of English, such as teaching self-efficacy and self-concept.

Qualitative analysis of the teacher diaries gave an insight into the teachers' emotional experiences related to their learners and teaching practices, as well as motivational beliefs that are associated with them. Croatian teachers of English in this study reported a wide range of pleasant and unpleasant emotions while interacting with their learners in class. The results indicated that satisfaction, enjoyment, joy, and pride were among the most frequently experienced pleasant emotions. With respect to the unpleasant emotions, some of the most notable ones include frustration, irritability, disappointment, and sadness. The emotions reported in this research were also reported by different authors, such as Frenzel et al. (2009), Taxer and Frenzel (2015), Sorić et al. (2015), and Khajavy et al. (2018).

Teacher diaries also probed into the sources of different emotions experienced by the L2 teachers of English. When asked what made them experience pleasant emotions in the classroom, the teachers' answers mainly revolved around their learners. Specifically, they experienced emotions such as satisfaction, joy, or pride when they witnessed their learners' display of knowledge, success (e.g. getting good grades in exams), improvement, or good behavior (which contributed to good classroom atmosphere). Other, less frequent, causes were associated with the teacher (e.g. teacher's success in class), or the teaching content (e.g. textbook lessons). As far as unpleasant emotions are concerned, the situation was similar; namely, they were predominantly evoked by the learners and the causes ranged from learners' inappropriate behavior and lack of motivation/interest to exhibiting lack of knowledge and negative outcomes (e.g. bad grades). Similar to the segment on pleasant emotions, some unpleasant emotions were caused by the teachers themselves (e.g. teacher's lack of preparation), or the teaching context (e.g. feeling boredom while overseeing exams or experiencing discomfort due to lacking working conditions). Several authors, such as Hargreaves (2000), Sorić et al. (2015), and Khajavy et al. (2018) also found that learners are major instigators of teacher emotions.

Another key aspect related to the teachers' emotions were classroom activities. While writing their diary entries, the teachers were required to note what they were doing when they experienced specific emotions. According to the results, among the most frequently reported activities were grammatical activities, speaking (oral production) activities, oral examinations, as well as reading and writing activities. When focusing on classroom activities that intersected between pleasant and unpleasant emotions, the findings singled out grammatical and speaking activities, along with oral examinations. Jean and Simard's (2011) research focused on L2 learners' and teachers' beliefs pertaining to teaching grammar and using grammatical activities. Their study indicated that such activities are widely used and considered necessary, though not always enjoyable. Both the learners and teachers' attitudes leaned more toward the negative side of the emotion spectrum Pishghadam et al. (2016) studied the association between EFL learners' skills and their emotions. Their research highlighted speaking and reading skills which are associated with speaking and text-related activities. The authors contended that speaking tends to evoke positive emotions, such as pride and enjoyment, due to the fact that speaking activities allow individuals to express their ideas and their creativity.

In terms of reading, it was shown as a neutral skill, meaning that it may instigate both pleasant and unpleasant emotions. The findings in this study partly coincide with the ones reported in Jean and Simard's (2011) study in a way that grammatical tasks were related to some unpleasant emotions experienced by the teachers (e.g. frustration) that were caused, among other things, by the learners' lack of interest in the subject matter, motivation, as well as the effort expended. Teachers reported experiencing boredom as a result of grammatical content they kept repeating in their classrooms. The mechanical, repetitive, and uninteresting nature of grammatical content was also reported by Dumančić (2018) in his study on boredom among Croatian EFL teachers. Grammar-based tasks also transected with pleasant emotions, such as enthusiasm, joy, or pride. These were primarily caused by the learners who acquired and applied the grammatical subject matter successfully.

With respect to the relationship between emotions and language skills reported by Pishghadam et al. (2016), the findings of this study found reading (as a skill) to be related to both pleasant and unpleasant emotions. Though that might seem to be in accordance with what was suggested by Pishghadam and colleagues, the emotions experienced by L2 teachers of English, in relation to reading, were primarily caused by the learners, rather than the learners' appraisal of the text or the activities they were expected to do. To illustrate, L2 teachers in this study recalled working on a text and feeling satisfied because of the students'

positive feedback on the topic. Another example would include experiencing enjoyment and pride due to the learners' success at group work (they did the reading comprehension tasks on their own) and positive classroom atmosphere. Unpleasant emotions, on the other hand, were not instigated by the reading content or tasks per se, but by the learners while being engaged in tasks related to reading. To illustrate, one teacher reported being angry as a result of a learner questioning his competence (e.g. knowledge of vocabulary found in the text). As far as speaking is concerned, Pishghadam et al. (2016) suggested that the skill is mostly related to positive emotions since it allows the learners to express themselves, their creativity, and ideas. The findings of this research partly corroborate their claim since teachers who mentioned carrying out speaking-based exercises recalled experiencing satisfaction (learners showed their language proficiency during classroom discussion), enjoyment (learners gave positive comments on the topic and the activity after class discussion), and pride (after successful show and tell presentations). Some of these examples do reflect the learners' and teachers' positive attitudes toward oral activities. Conversely, speaking activities were also tied to unpleasant emotions, according to the results of this study. It should be stated that these emotions were not caused by the activities themselves, but the learners who were engaged in them. For instance, one example would involve teachers that felt frustrated and disappointed while conducting class discussion on a given topic. The emotions were evoked by a number of learners that showed little interest in the activity and invested minimal effort to partake in it.

Alongside the emotions and classroom activities, emotion management represented a different area of interest. In other words, while keeping their diaries, the teachers were required to explain how they dealt with the emotions once they had occurred. The qualitative analysis yielded some interesting results pertaining to the teachers' use of emotion regulation strategies. Specifically, among the most notable strategies were down-regulation, suppression, showing real emotions reappraisal, and deep breathing. Some strategies, namely down-regulation, suppression, talking to someone, and reappraisal were noted in regards to both pleasant and unpleasant emotions. While emotion regulation strategies are commonly regarded as means of down-regulating unpleasant emotions (Gong et al., 2013; Jiang et al., 2016), they can be used for other purposes. For instance, Gross (2014) states that both pleasant and unpleasant emotions can be up/down-regulated, the only difference is in the motives that underlie the regulation process. The findings of this study can be interpreted within the scope of Gross's contention regarding the emotion regulation motives. To clarify, L2 teachers of English reported engaging in masking or suppression of both pleasant and

unpleasant emotions. The reason behind both instances was most likely to comply with the rules of the teaching profession. In other words, they opted to display those emotions that were deemed appropriate for their learners, and to maintain their professional demeanor. For instance, one teacher was satisfied with the good grades their learners got in their exams. Rather than to show it openly, the teacher decided to mask the emotion. Another, more typical case of suppression or down-regulation, is associated with unpleasant emotions. To exemplify, one teacher clearly recalled feeling frustrated at the bad behavior of some learners while working on grammatical activities involving future forms. The teacher chose not to show the emotion in full intensity and simply toned it down.

While showing real emotions was the second most frequently used emotion regulation strategy related to pleasant emotions (e.g. satisfaction, enjoyment, and enthusiasm), it was not used at all when dealing with unpleasant emotions. This finding might suggest that L2 teachers felt it appropriate to showcase how they felt when the emotions were regarded as conducive to positive classroom atmosphere and learner productivity and motivation. It may also be due to the fact that open display of positive emotions did not have a detrimental effect on their mental health and teaching efficacy. Both down-regulation and suppression are similar since they involve either masking or reducing the intensity of the emotion. With regards to the strategies mentioned in this study, they can be classified according to Gross's (1998) framework. Reappraisal, for instance, belongs to the antecedent-focused group of strategies, while suppression or talking to someone can be placed in the response-focused group. These findings were also corroborated by other researchers, such as Burić et al. (2016), Akbari et al. (2017), Tejeda et al. (2016), and Ghanizadeh and Rayoei (2015).

Another intriguing aspect of the qualitative analysis involved the teachers' motivational beliefs. More accurately, the teachers were asked to elaborate on their ideal teacher self-image, alongside their teaching self-efficacy beliefs. With respect to teacher self-concept, the results revealed eight different ideal teacher self-images. In addition, the teachers based these images on the notions of expertise, success, competence, motivation, emotional intelligence, confidence, and fear. To briefly illustrate, Croatian L2 teachers in this study had a positive self-image and primarily saw themselves as teachers who wanted to continue to learn and improve themselves. They also had images of themselves as successful educators who were motivated and who inspired motivation in their learners. However, in the midst of generally positive images, one that differed was based on doubt, fear and uncertainty (the image of a pessimistic teacher). Namely, a small number of teachers had a pessimistic view of their future teacher self that could have been rooted in goals they were unable to achieve.

As a result, according to Raynor's (1974) contingent path, they would not be able to start working on achieving the next goal. Several researchers, namely Raynor (1974), Babanoglu (2017), Dastogoshadeh (2018), Kubayniova (2015) and Kumazawa (2013) carried out studies that reported on the majority of ideal teacher self-images listed. For instance, Dastogoshadeh (2018) addressed the images of motivated and motivating teacher, as well as the one of emotionally intelligent teacher. Kubanyiova's (2015) study represented a teacher whose ideal self-image resembles the one of competent teacher. With regards to the unusual image of a pessimistic teacher, similar notions were discussed by Raynor (1974) and Rahmati et al. (2019).

In terms of the teachers' appraisal of their teaching abilities, the results showed that the majority exhibited high levels of self-efficacy (regardless of the emotions experienced). This is particularly in regards to teachers who experienced pleasant emotions, such as satisfaction, enjoyment, pride, and enthusiasm. When focusing on related classroom activities, high self-efficacy was observed after classes that involved grammatical activities, student presentations, oral examinations, and written assignments. Thompson's (2016) research reported similar findings which showed that teachers' high levels of self-efficacy are related to the learners' accomplishments and demonstration of what they had learned. The second most frequent group exhibited moderate levels of self-efficacy. The teachers in that group recalled experiencing satisfaction, joy, enjoyment and empathy after classes that involved student projects, class discussions, activities that called for group/pair work, and exam revision. Chacon's (2005) research was one of the studies in which foreign language teachers attested to having moderate levels of self-efficacy. The participants did not relate it to any specific classroom activity but to specific skills, such as listening and speaking and culture knowledge. The group of teachers with low levels of teaching self-efficacy was the smallest. They only recalled experiencing joy after classes that included class observation and grammar revision.

The findings of this research may be discussed in relation to Thompson's (2016) study which found Japanese teachers of English to exhibit strong efficacy beliefs for using English and their capacity to help students get into universities. Croatian L2 teachers also showed high levels of confidence in their content knowledge (knowledge of English). When it comes to student achievement (as labeled in Thompson's study), the participants in this study reported high levels of self-efficacy caused by their learners, e.g. their successfully held presentations, good grades obtained during written/oral examination, and speaking activities where they exhibited verbal prowess. Student achievement, as described by Thompson, can

also be discussed with respect to one aspect of foreign language teaching self-efficacy, namely teacher as facilitator. According to the findings, L2 teachers of English admitted to have less confidence in their ability to promote learners' motivation of learning L2, or helping them learn at the highest level. This would, then, go contrary to the finding reported by Thompson.

With regards to Chacon's (2005) study, there were similarities in terms of the results pertaining to general teaching efficacy. This study also showed L2 teachers to be moderately confident in their ability to provide adequate instructional strategies, manage the classroom, and motivate the learners. Specifically, the teachers in both studies rated their instructional strategies efficacy as highest, followed by classroom management, and student engagement. This would indicate that both Croatian and Venezuelan teachers of English feel more confident in their capacity to instruct the learners by means of various strategies, as opposed to their ability to control the classroom, and facilitate student interaction.

In regards to teacher self-efficacy and unpleasant emotions, the results revealed a similar situation; namely, the largest group was the one with teachers who exhibited high levels of self-efficacy despite experiencing emotions such as frustration or powerlessness. This was followed by a group of teachers with moderate and low levels of teacher self-efficacy. To briefly elaborate, less than half the sample stated that they had experienced frustration, disappointment, and irritability toward their learners; however, they still retained high confidence in their teaching abilities. These emotions were reported after classes that focused on grammatical activities, testing, and oral examination. Teachers who reported having moderate levels of confidence in their teaching abilities also attested to experiencing frustration, disappointment, irritability, and boredom in class. Moreover, these emotions were linked to classes that incorporated grammatical activities, testing, student presentations, and workshop projects.

Zakeri and Alavi (2011) reported that the teachers in their study also exhibited moderate levels of self-efficacy and that they felt least efficacious in promoting learning and fostering participation. Lastly, the smallest group recounted having low levels of teacher self-efficacy after feeling frustrated, sad, powerless, irritable, hostile, anxious, and ashamed in their classrooms. The emotions listed ensued after classes that included grammatical activities and the process of entering learners' grades into the class register. However, it should be noted that many referenced studies focused on specific dimensions of teacher self-efficacy (e.g. classroom management), whereas the Croatian L2 teachers in this study only reported on a general assessment of their teacher self-efficacy.

The second part of the research was quantitative in nature and it involved several in-depth analyses concerning teachers' motivational beliefs and emotional experiences. According to the descriptive analyses, Croatian teachers of English exhibited a moderately high sense of teaching efficacy, when compared to the scale range of the TSES instrument (1 indicating no confidence and 9 indicating a great deal of confidence). They felt most confident in their abilities to utilize adequate instructional strategies, while they showed least confidence in their capacity to engage their learners. In addition, they believed they had some influence as far as classroom management was concerned. These findings mainly coincide with those reported by Kostić-Bobanović (2016), Zakeri and Alavi (2011), Eslami and Fatahi (2008), among others. With respect to foreign language teaching self-efficacy, the findings showed the Croatian teachers of English to be more confident in their abilities to use English in class (content knowledge) and promote foreign language learning (teacher as facilitator) than in their general teaching abilities. Nevertheless, despite the higher scores in these teaching segments, the teachers felt less confident in their abilities to engage learners, get them interested (motivate them?) and facilitate their L2 learning processes.

The studies carried out by Swanson (2013), and Smith-Justice (2017) reported similar findings. In terms of self-concept, the results indicated that Croatian teachers of English have a weaker image of themselves as foreign language teachers. Their partly coherent vision rested on the notions of who they aimed to become (ideal teacher self), who they should become (ought-to teacher self), and who they feared of becoming (feared teacher self). Teacher cognition is key as it comprises of teachers' thoughts, beliefs, and knowledge (Borg, 2003). Moreover, what teachers think, what they believe about a language, and the memories they carry could have an impact on the classroom atmosphere, as well as the process of language learning (Dörnyei & Kubanyiova, 2014). Some authors, such as Zembylas (2003) and Hong (2010) suggested that the process of shaping and re-shaping of teacher self is related to both self-awareness and how the teaching profession is perceived. It is possible that Croatian teachers lack the necessary self-awareness that would allow them to identify and construct a strong and rational image of their teacher self. In short, future teacher selves can play an important role in teacher motivation which can affect learners' L2 learning.

With regards to the emotional domain, the results showed that the teachers in this study experienced pleasant emotions more than unpleasant ones. To illustrate, joy was the most frequently experienced positive emotion, while love was the least experienced emotion. On the other hand, fatigue was the most frequent among the negative emotions, while anger was the least notable one. The study conducted by Becker et al. (2015) among 39 German teachers employed in Gymnasium, for instance, also confirmed a higher presence of pleasant emotions among teachers in comparison to unpleasant emotions. Hargreaves (2000) confirmed that teachers experience love (which was the lowest ranked positive emotion in this study) and anger. While Pekrun et al. (2018) and Hargreaves (2000) claim that teacher anger is quite prominent and frequent among teachers, the results of this study show that this is not the case with Croatian L2 teachers.

When inquired about their use of emotional labor strategies, the Croatian L2 teachers admitted to using natural display most frequently. They also reported occasionally resorting to deep acting and infrequently to surface acting. This might be explained by the fact that the participants were providing socially desirable responses, or that they were adhering to the rules of their profession, i.e. indicating which emotions are desirable in the classroom and which are not. Winograd (2003) contends that teaching profession comes with its own set of rules and behavioral norms and teachers need to choose the strategy that works best for them. Yin et al.'s (2013) research among Chinese school teachers coincides with the results of this study, stating that teachers primarily choose to show their emotions as they come, not as they should be displayed.

When it comes to the correlation analyses, the results confirmed that teachers that experience pleasant emotions, such as joy, pride, and love, will resort to using emotional labor strategies, such as deep acting, more frequently. This would imply that the teachers that frequently report experiencing positive emotions will expend additional effort into evoking them before their learners. This would, in turn, have a favorable effect on the learners' motivation, as well as classroom atmosphere. This finding was also reported by other authors, such as Lee et al. (2016) and Burić (2019). The highest positive correlation was observed between love and deep acting, while the lowest was between joy and the same strategy. In addition, teachers that experience said pleasant emotions also displayed higher levels of teacher self-efficacy. The result might be interpreted in a way that teachers that experience love in their dealings with learners will be motivated to invest effort in trying to maintain/evoke the same positive emotion even when it might be absent. In addition, teachers

that feel love, joy, or some other pleasant emotion will be more likely to better appraise their capacity to teach.

Authors such as Taxer and Frenzel (2015) and Burić and Macuka (2017) go in line with this contention. Positive correlation was noted between said positive emotions and all the domains of teacher self-efficacy (instructional strategies, classroom management, and student engagement). This would suggest that there is a close relationship between said pleasant emotions, teacher self-efficacy, and student engagement. Moreover, the classroom dynamics is shaped by the teachers' positive affective states and their interactions with the learners. The findings also confirmed that teachers that experience positive emotions will have a better vision of themselves as teachers. According to the results, the highest positive correlation was noticed between pride and teacher self-concept, followed by love and joy. The finding suggests that future teacher images are linked to pleasant emotions, which may imply that L2 teachers are intrinsically motivated. Moreover, if teachers' image is clearly defined and supported, they may experience pleasant emotions more frequently. Dörnyei and Kubanyiova (2014) stated that teachers need to consider the impact of several factors, experiences and emotions being among them, in the process of creating a clear and visible image of themselves.

The correlations analyses also focused on negative emotions and their impact on the use of emotional labor strategies, teacher self-efficacy beliefs, and self-concept. It was confirmed that teachers that experience unpleasant emotions, such as anger, fatigue, and hopelessness, will resort to surface acting more readily. This was corroborated by the findings proposed by Burić (2019) and Lee et al. (2016). In the case of Croatian L2 teachers, the highest positive correlation was found between fatigue and surface acting. The finding suggests that teachers' mental and physical health plays a great role in their profession, that is their ability to uphold the display rules of teaching. If a teacher becomes fatigued, it is reasonable to expect their 'emotional battery' to be depleted. This might lead them to engage in masking or suppressing their true emotions in front of their learners. This corresponds to the findings obtained by Burić and Macuka (2017) and Taxer and Frenzel (2015). In the case of Croatian teachers of English, the highest statistically relevant negative correlation was noted between anger and classroom management, also anger and teacher as facilitator (in the foreign language teaching self-efficacy domain). This might imply that anger may be associated with the issue of classroom discipline, alongside the teachers' appraisal of their ability to teach a foreign language. Furthermore, the relation between fatigue and classroom management might indicate that tired teachers will find it more challenging to control the

learners and instill discipline if they are 'burned out'. When it comes to teacher self-concept, the results confirmed that negative emotions had a detrimental effect on how teachers envisioned themselves professionally. The highest statistically significant negative correlation was seen between anger, hopelessness, and self-concept. This finding might signify that angry and hopeless teachers are incapable of shaping a clear positive image of their future teacher self. In addition, this might result in decrease in motivation.

The relationship between positive emotions, naturally felt emotions, self-efficacy, and teacher self-concept was also examined. The results of the study confirmed that teachers that experienced pleasant emotions, such as joy, pride, and love, more frequently also showed their true emotions more openly. This goes in line with the findings reported by Taxer and Frenzel (2015). In this study, the highest positive correlation was perceived between love and naturally felt emotions. Moreover, the results also validated the statement that teachers that choose to display their true emotions more frequently will also have higher levels of teacher self-efficacy. To illustrate, statistically significant, though weaker, positive correlations were observed between naturally felt emotions and all the domains of general teacher efficacy. This finding was confirmed by the results presented by Yin et al. (2017). On the other hand, a significant positive relationship was found between naturally felt emotions and teacher as facilitator.

Based on this it may be assumed that teachers who display their emotions openly in class will be better suited to promote their learners' L2 acquisition process. In regards to teacher self-concept, it was found that teachers who engage in naturally felt emotions among their learners also have a more vivid vision of themselves as teachers. According to the results, there was a statistically significant, weak positive correlation between naturally felt emotions and teacher self-concept. This might indicate that teachers that invest effort in choosing the appropriate strategy of regulating their emotions will also take time and attempt to construct their ideal teacher self-image. As Hamman et al. (2013) put it, agency is attained through acting and reflecting on oneself.

Lastly, this study set out to determine whether emotions contribute in explaining self-efficacy and self-concept directly, as well as indirectly, by means of emotional labor. The findings showed that positive and negative emotions mediated between emotional labor strategies and general teacher self-efficacy beliefs. All the dimensions of emotional labor were directly associated with positive and negative emotions. To illustrate, deep acting correlated positively with positive emotions and negatively with negative emotions. Also, surface acting had the opposite contribution; namely, it was positively associated with

negative emotions and negatively with positive ones. These results were also corroborated in studies carried out by Burić et al. (2019), Lee et al. (2016), and Taxer and Frenzel (2015). Positive and negative emotions were also directly linked to teacher self-efficacy beliefs. A moderate positive effect was observed between positive emotions and self-efficacy beliefs and negative effect between negative emotions and the same variable. A similar occurrence was also reported by Burić and Macuka (2017).

When focusing on the mediation model that had foreign language self-efficacy beliefs as its outcome, it can be noticed that positive and negative emotions mediated between emotional labor strategies and foreign language self-efficacy constructs (content knowledge and teacher as facilitator). In regards to the relationship between emotions and emotional labor strategies, they were the same as described in the section above. Moreover, positive emotions had a stronger positive impact on teacher as facilitator, as opposed to content knowledge. Negative emotions had the opposite effect. These findings go in line with the ones proposed by Burić et al. (2019), Taxer and Frezel (2015), Lee and van Vlack (2017). The model also revealed no positive effect between positive and negative emotions.

The final mediation model that had teacher self-concept as the outcome revealed positive and negative emotions as mediators between emotional labor strategies and self-concept. Furthermore, the relationship between emotional labor strategies and the emotions remained the same; namely, deep acting and naturally felt emotions were positively associated with positive emotions and negatively with negative ones. Surface acting was positively tied to negative emotions and negatively to positive ones. With respect to the relations between the emotions and teacher self-concept, the model indicated that positive emotions were positively related to self-concept, whereas negative emotions were negatively associated with it. Akin to the model above, no positive relations were observed between positive and negative emotions. Based on these findings it might be indicated that emotions are key in the process of shaping one's ideal teacher self-image. Pleasant emotions are likely to foster the teachers' construction of their teacher self-image and increase their motivation to attain it. Conversely, unpleasant emotions hinder the process of forming a stable ideal teacher self-image. Should a teacher experience hopelessness, for instance, they might not be able to discern who it is that they wish to become, or how to attain that goal.

6.1. Significance of the Findings

The general goal of this research was to investigate the relationship the Croatian teachers' motivational beliefs and their emotional experiences in their interaction with the learners. The study strived to illustrate the emotions Croatian teachers of English experience, the causes of those emotions, the classroom activities related to them, as well as emotion regulation strategies used. Moreover, the teachers' motivational beliefs, namely teacher future self-guides and self-efficacy beliefs, were of great interest as well. Judging by the findings obtained it can be stated that the teachers' motivation and emotions are intricately connected. Emotions, as noted by MacIntyre, MacKinnon and Clément (2009) and Dörneyi and Ushioda (2009), can serve as powerful motivators for learners and, by extension, teachers. This study showed that the L2 experience a wide range of emotions in their classrooms. In addition, their emotions, as well as their choice of emotion management techniques, directly reflect on their self-perceived confidence in teaching abilities and the process of constructing vivid images of their future selves. The findings presented may benefit educators in general, and foreign language teachers in particular. They may also serve to enrich the methodological teaching content designed for future teachers, as well as to raise the awareness of teachers' emotional well-being and strategies that help develop emotional resilience.

6.2. Limitations of the Study

Several limiting conditions should be stated in the case of this study. The instruments used, namely open-ended survey (teacher diary) and questionnaires, allowed for a limited insight into the expansive realm of teacher motivational beliefs and emotional experiences. Though teacher diaries enabled the respondents to supply their own content, follow-up inquiries requesting clarification or additional examples were not possible. Barring the teacher diary, which was kept for a certain period, the study was cross-sectional in nature. The drawback of cross-sectional design is that the correlations obtained are subject to opposite interpretations. In the case of the study at hand, it might be stated that certain emotions define some emotion regulation strategy, and vice-versa. The data was obtained at a specific point and thus general conclusions in regards to causal ties cannot be made. Furthermore, another limitation pertains to the teachers' possible propensity for providing socially desirable responses. This is not uncommon since people tend to characterize things as they believe is expected of them, rather than how they actually are. Teachers' are highly motivated to provide socially desirable responses and that motivation rests on the notion of maintaining professional demeanor, as

well as upholding the emotional display rules of the teaching profession. Also, this study encompassed a sample of teachers employed in primary and secondary schools, as well as some language centers. Further research endeavors might expand the scope to involve language experts working in other domains.

6.3. Recommendations for Further Research

Future research on the topic might be longitudinal so as to keep track of changes in teachers' motivational beliefs and emotional experiences. This may be particularly interesting in the case of novice teachers and the challenges they face on their professional path. Among other aspects covered in this research, the concept of pessimistic teacher or feared teacher self might be an interesting angle to follow up on. Furthermore, in addition to the instruments utilized, in-depth interview sessions over a longer stretch of time might provide valuable information on foreign language teachers' emotional lives, well-being, and their impact on motivation. This approach will allow the researchers to pinpoint the areas of interest and pose additional questions. Also, the teacher diary can be expanded (to include other variables) and be kept for a longer period (so as to get a better glimpse of the teachers' inner thoughts, wishes, and fears related to foreign language teaching). Future research on the topic might also involve other experts in the field, for instance pre-school language teachers, or university teachers. Both groups come from the opposite ends of the teaching spectrum and could provide intriguing observations related to their respectable teaching levels. Moreover, it might be prudent to base future research on longitudinal designs so as to gain insight into causal relations among the constructs analyzed. Learners' assessment related to the instructional quality of their teachers might yield interesting findings.

6.4. Implications for Teaching

The findings from this study cover two key aspects related to teaching: motivation and emotions. The teaching profession is replete with emotional experiences associated with learners, colleagues, parents, or the education system as such. Teachers, as experts in their fields navigate a challenging path that requires them to transmit knowledge, develop their learners' abilities, raise their motivation, and to adhere to the rules and norms of their profession. All of these demands take a toll on their psychological and physiological well-being, as well as their teaching practices. To ensure their well-being, teaching quality, good rapport with learners, personal efficacy, and motivation to teach, teachers need to become aware of and use specific strategies that will allow them to cope with adverse effects of

emotions experienced every day. This is of particular importance to pre-service and novice teachers that have yet to gain teaching experience and develop their inter/intrapersonal competences. The results from this study may also be used to instruct the teachers on how to utilize emotion regulation strategies at different levels, for instance higher institutions, as well as inform curriculum designers on their usefulness in L2 learning and teaching.

REFERENCES

Ağçam, R., & Babanoğlu, M. P. (2016). Exploring self-efficacy beliefs of primary school teachers in Turkey. *European Journal of Education Studies*, *2*(11), 121–133.

Akbari, R., & Abdenia, A. (2009). Second Language Teachers' Sense of Self- efficacy: A Construct Validation. *TELL*, *3*, 1–35.

Akbari, R., Samar, R. G., Kiany, G. R., & Tahernia, M. (2017). A qualitative study of EFL teachers' emotion regulation behavior in the classroom. *Theory and Practice in Language Studies*, *7*(4), 311–321. doi:10.17507/tpls.0704.10

Alexander, P. A. (2008). Charting the course for the teaching profession: The energizing and sustaining role of motivational forces. *Learning and Instruction*, *18*(5), 483–491. doi:10.1016/j.learninstruc.2008.06.006

American Psychiatric Association (APA). (2013). *Diagnostic and statistical manual of mental disorders* (5th ed), DSM-5. Arlington, VA. American Psychiatric Association.

Aragão, R. (2011). Beliefs and emotions in foreign language learning. *System*, *39*(3), 302–313. doi:10.1016/j.system.2011.07.003

Babanoğlu, M. P. (2017). A study on possible selves of Turkish pre-service EFL teachers. *Arab World English Journal*, *8*(4), 39–48. doi:10.24093/awej/vol8no4.3

Bachman, L. F., & Palmer, A. S. (1996). *Language testing in practice: Designing and developing useful language tests*. Oxford: Oxford University Press.

Bandura, A. (1986). *Social foundations of thought and action: A social cognitive theory*. Englewood Cliffs, NJ: Prentice Hall.

Bandura, A. (1993). Perceived self-efficacy in cognitive-development and functioning. *Educational Psychologist*, *28*(2), 117–148. doi:10.1207/s15326985ep2802_3

Bandura, A. (1997). *Self-efficacy: The exercise of control*. W H Freeman/Times Books/Henry Holt & company.

Bandura, A. (2001). Social cognitive theory: An agentic perspective. *Annual Review of Psychology*, *52*, 1–26. doi:10.1146/annurev.psych.52.1.1

Barnyak, N. C., & McNelly, T. A. (2009). An urban school district's parent involvement: A study of teachers' and administrators' beliefs and practices. *School Community Journal*, *19*(1), 33–58.

Baumeister, R. F., Bratslavsky, E., Muraven, M., & Tice, D. M. (1998). Ego depletion: Is the active self a limited resource? *Journal of Personality and Social Psychology*, *74*(5), 1252–1265. doi:10.1037//0022-3514.74.5.1252

Bechara, A., Damasio, H., & Damasio, A. R. (2000). Emotion, decision making and the orbitofrontal cortex. *Cerebral Cortex*, *10*(3), 295–307. doi:10.1093/cercor/10.3.295

Becker, E. S., Keller, M. M., Goetz, T., Frenzel, A. C., & Taxer, J. L. (2015). Antecedents of teachers' emotions in the classroom: An intraindividual approach. *Frontiers in Psychology*, *6*, 635. doi:10.3389/fpsyg.2015.00635

Bergman, P., McLaughlin, M., Bass, M., Pauly, E., & Zellman, G. (1977). Federal programs supporting educational change, *VII. Factors Affecting Implementation and Continuation*. Santa Monica, CA: Rand Corporation.

Bernat, E., & Gvozdenko, I. (2005). Beliefs about language learning: Current knowledge, pedagogical implications, and new research directions. *TESL – E J*, *9*, (1–21).

Borg, S. (2003). Teacher cognition in language teaching: A review of research on what language teachers think, know, believe, and do. *Language Teaching*, *36*(2), 81–109. doi:10.1017/S0261444803001903

Bown, J., & White, C. J. (2010). Affect in a self-regulatory framework for language learning. *System*, *38*(3), 432–443. doi:10.1016/j.system.2010.03.016

Boyatzis, R. E., & Akrivou, K. (2006). The ideal self as the driver of intentional change. *Journal of Management Development*, *25*(7), 624–642. doi:10.1108/02621710610678454

Brackett, M. A., Palomera, R., Mojsa-Kaja, J., Reyes, M. R., & Salovey, P. (2010). Emotion-regulation ability, burnout, and job satisfaction among British secondary-School TEACHERS. *Psychology in the Schools*, *47*(4), n/a–n/a. doi:10.1002/pits.20478

Bress, P. (2006). Beating stress: Creating happiness and well-being in TEFL. *Modern English Teacher*, *15*(3), 5–15.

Brígido, M., Borrachero, A. B., Bermejo, M. L., & Mellado, V. (2013). Prospective primary teachers' self-efficacy and emotions in science teaching. *European Journal of Teacher Education*, *36*(2,), 200–217. doi:10.1080/02619768.2012.686993

Brotheridge, C. M., & Grandey, A. A. (2002). Emotional labor and burnout: Comparing two perspectives of "people work". *Journal of Vocational Behavior*, *60*(1), 17–39. doi:10.1006/jvbe.2001.1815

Brotheridge, C. M., & Lee, R. T. (2003). Development and validation of the Emotional Labour Scale. *Journal of Occupational and Organizational Psychology*, *76*(3), 365–379. doi:10.1348/096317903769647229

Brown, H. D. (1990). M and Ms for language classrooms? Another look at motivation. In J. E. Alatis (Ed.), *Georgetown University round table on language and linguistics* (pp. 383–393). Washington, DC: Georgetown University Press.

Browne, M. W., & Cudeck, R. (1993). Alternative ways of assessing model fit. In K. A. Bollen & J. S. Long (Eds.), *Testing structural equation models* (pp. 136–162). Newbury Park, CA: SAGE.

Buck, R. (1993). What is this thing called subjective experience? Reflections on theneuropsychology of qualia. *Neuropsychology*, *7*(4), 490–499. doi:10.1037/0894-4105.7.4.490

Buck, R. (2005). Adding ingredients to the self-organizing dynamic system stew: Motivation, communication, and higher-level emotions and don't forget the genes! *Behavioral and Brain Sciences*, *28*(2), 197–198+. doi:10.1017/S0140525X05250045

Burić, I. (2019). The role of emotional labor in explaining teachers' enthusiasm and students' outcomes: A multilevel mediational analysis. *Learning and Individual Differences*, *70*, 12–20. doi:10.1016/j.lindif.2019.01.002

Burić, I., & Frenzel, A. C. (2019). Teacher emotional labour, instructional strategies, and students' academic engagement: A multilevel analysis. *Teachers and Teaching*, 1–18. doi:10.1080/13540602.2020.1740194

Burić, I., & Macuka, I. (2018). Self-efficacy, emotions and work engagement among teachers: A two wave cross-lagged analysis. *Journal of Happiness Studies*, *19*(7), 1917–1933. doi:10.1007/s10902-017-9903-9

Burić, I., Penezić, Z., & Sorić, I. (2017). Regulating emotions in the teacher's workplace: Development and initial validation of the teacher emotion-regulation scale. *International Journal of Stress Management*, *24*(3), 217–246. doi:10.1037/str0000035

Burić, I., & Slišković, A. (2016). Skala strategija emocionalnog Napora (SSEN). In I. Tucak Junaković (Ed.) i sur. (ur.) Zbirka psihologijskih skala i upitnika, 8 (str. 55-63), *Odjel za psihologiju, Sveučilište u Zadru*.

Burić, I., Slišković, A., & Macuka, I. (2018). A mixed-method approach to the assessment of teachers' emotions: Development and validation of the Teacher Emotion Questionnaire. *Educational Psychology*, *38*(3), 325–349. doi:10.1080/01443410.2017.1382682

Burić, I., Slišković, A., & Penezić, Z. (2019). Understanding teacher well-being: A cross-lagged analysis of burnout, negative student-related emotions, psychopathological symptoms and resilience, Educational Psychology: An International Journal of Experimental Educational Psychology, objavljen. *Online*. doi:10.1080/01443410.2019.1577952

Burić, I., Slišković, A., & Penezić, Z. (2019). A two-wave panel study on teachers' emotions and emotional-labour strategies. *Stress and Health*, *35*(1), 27–38. doi:10.1002/smi.2836

Burić, I., Sorić, I., & Penezić, Z. (2016). Emotion regulation in academic domain: Development and validation of the academic emotion regulation questionnaire

(AERQ). *Personality and Individual Differences*, *96*, 138–147. doi:10.1016/j.paid.2016.02.074

Butler, R. (2007). Teachers' achievement goal orientations and associations with teachers' help seeking: Examination of a novel approach to teacher motivation. *Journal of Educational Psychology*, *99*(2), 241–252. doi:10.1037/0022-0663.99.2.241

Butler, Y. G. (2004). What level of English proficiency do elementary school teachers need to attain to teach EFL? Case studies from Korea, Taiwan, and Japan. *TESOL Quarterly*, *38*(2), 245–278. doi:10.2307/3588380

Caires, S., Almeida, L., & Vieira, D. (2012). Becoming a teacher: Student teachers' experiences and perceptions about teaching practice. *European Journal of Teacher Education*, *35*(2), 163–178. doi:10.1080/02619768.2011.643395

Capa-Aydin, Y., Sungur, S., & Uzuntiryaki, E. (2009). Teacher self-regulation: Examining a multidimensional construct. *Educational Psychology*, *29*(3), 345–356. doi:10.1080/01443410902927825

Carson, R. L. (2006). *Exploring the episodic nature of teachers' emotions as it relates to teacher burnout*. West Lafayette, IN: Purdue University Press.

Carson, R. L. (2007). Emotional regulation and teacher burnout: Who says that the management of emotional expression doesn't matter? Paper presented at the American Educational Research Association Annual Meeting, Chicago, IL.

Carver, C. S., Reynolds, S. L., & Scheier, M. F. (1994). The possible selves of optimists and pessimists. *Journal of Research in Personality*, *28*(2), 133–141. doi:10.1006/jrpe.1994.1011

Chacón, C. T. (2005). Teachers' perceived efficacy among English as a foreign language teachers in middle schools in Venezuela. *Teaching and Teacher Education*, *21*(3), 257–272. doi:10.1016/j.tate.2005.01.001

Chahkandi, F., Eslami Rasekh, A. E., & Tavakoli, M. (2016). Efficacious EFL teachers' goals and strategies for emotion management: The role of culture in focus. *Iranian Journal of Applied Linguistics*, *19*(1), 35–72. doi:10.18869/acadpub.ijal.19.1.35

Chang, M. L. (2009). An appraisal perspective of teacher burnout: Examining the emotional work of teachers. *Educational Psychology Review*, *21*(3), 193–218. doi:10.1007/s10648-009-9106-y

Clément, R., Dörnyei, Z., & Noels, K. A. (1994). Motivation, self-confidence, and group cohesion in the foreign language classroom. *Language Learning*, *44*(3), 417–448. doi:10.1111/j.1467-1770.1994.tb01113.x

Clément, R., Gardner, R. C., & Smythe, P. C. (1977). Motivational variables in second language acquisition: A study of francophones learning English. *Canadian Journal of*

Behavioural Science/Revue Canadienne des Sciences du Comportement, *9*(2), 123–133. doi:10.1037/h0081614

Clément, R., & Noels, K. A. (1992). Towards a situated approach to ethnolinguistic identity: The effects of status on individuals and groups. *Journal of Language and Social Psychology*, *11*(4), 203–232. doi:10.1177/0261927X92114002

Clément, R., Noels, K. A., & Deneault, B. (2001). Interethnic contact, identity, and psychological adjustment: The mediating and moderating roles of communication. *Journal of Social Issues*, *57*(3), 559–577. doi:10.1111/0022-4537.00229

Cole, P. M., Michel, M. K., & Teti, L. O. (1994). The development of emotion regulation and dysregulation: A clinical perspective. *Monographs of the Society for Research in Child Development*, *59*(2–3), 73–100, 250–283

Conway, P. (2001). Anticipatory reflection while learning to teach: From a temporally truncated to a temporally distributed model of reflection in teacher education. *Teaching and Teacher Education*, *19*, 465–482

Cowie, N. (2003). The emotional lives of experienced EFL teachers. In JALT. *Proceedings of the JALT 2003 Conference*, Shizuoka, Tokyo, Japan (pp. 256–259). Japan Association for Language Teaching.

Cowie, N. (2011). Emotions that experienced English as a Foreign Language (EFL) teachers feel about their students, their colleagues and their work. *Teaching and Teacher Education*, *27*(1), 235–242. doi:10.1016/j.tate.2010.08.006

Crookes, G., & Schmidt, R. W. (1991). Motivation—Reopening the research agenda. *Language Learning*, *41*(4), 469–512. doi:10.1111/j.1467-1770.1991.tb00690.x

Cross, D. I., & Hong, J. Y. (2009). Beliefs and professional identity: Critical constructs in examining the impact of reform on the emotional experiences of teachers. In P. A. Schutz & M. Zembylas (Eds.), *Advances in teacher emotion research: The impact on teachers' lives* (pp. 273–296). New York: Springer Publishing.

Csikszentmihalyi, M. (1975). *Beyond boredom and anxiety*. San Francisco: Jossey-Bass.

Csikszentmihalyi, M. (1990). *Flow: The psychology of optimal experience*. New York: Harper & Row.

Csikszentmihalyi, M. (1997)/reprinted. Flow and education. In M. Csikszentmihalyi (Ed.), *Applications of flow in human development and education. The collected works of Mihaly Csikszentmihalyi, 2014*) (pp. 129–152). Dordrecht, The Netherlands: Springer Netherlands.

Dastogoshadeh, A. (2018). Developing a model of teachers' possible selves for the Iranian context. *Journal of Teaching Language Skills (JTLS)*, *37*(1), 73–96.

Day, C., & Quing, G. (2009). Teacher emotions: Well-being and effectiveness. In P. A. Schutz & M. Zembylas (Eds.), *Advances in teacher emotion research: The impact on teachers' lives* (pp. 15–31). New York: Springer.

Deci, E. L. (1992). The relation of interest to the motivation of behavior: A self-determination theory perspective. In K. A. Renninger, S. Hidi & A. Krapp (Eds.), *The role of interest in learning and development* (pp. 43–71). Hillsdale, NJ: Erlbaum.

Deci, E. L., & Ryan, R. M. (1985). *Intrinsic motivation and self-determination in human behavior*. New York: Plenum Press.

Dellinger, A. B., Bobbett, J. J., Olivier, D. F., & Ellett, C. D. (2008). Measuring teachers' self-efficacy beliefs: Development and use of the TEBS-Self. *Teaching and Teacher Education*, *24*(3), 751–766. doi:10.1016/j.tate.2007.02.010

Denzin, N. K. (1984). *On understanding emotion*. San Francisco: Jossey-Bass Publ.

Dewaele, J. M. (2008). The emotional weight of "I love you" in multilinguals' languages. *Journal of Pragmatics*, *40*(10), 1753–1780. doi:10.1016/j.pragma.2008.03.002

Dewaele, J. M. (2011). Reflections on the emotional and psychological aspects of foreign language learning and use. *Anglistik. International Journal of English Studies*, *22*(1), 23–42.

Diener, E., Suh, E. M., Lucas, R. E., & Smith, H. L. (1999). Subjective well-being: Three decades of progress. *Psychological Bulletin*, *125*(2), 276–302. doi:10.1037/0033-2909.125.2.276

Dinham, S., & Scott, C. (2000). Moving into the third, outer domain of teacher satisfaction. *Journal of Educational Administration*, *38*(4), 379–396. doi:10.1108/09578230010373633

Dörnyei, Z. (1994a). Conceptualizing motivation in foreign language learning. *Language Learning*, 78, 273–284

Dörnyei, Z. (1994b). Motivation and motivating in the foreign language classroom. *Modern Language Journal*, *78*(3), 273–284. doi:10.1111/j.1540-4781.1994.tb02042.x

Dörnyei, Z. (1998). Motivation in second and foreign language learning. *Language Teaching*, *31*(3), 117–135. doi:10.1017/S026144480001315X

Dörnyei, Z. (2003). Attitudes, orientations, and motivations in language learning: Advances in theory, research, and applications. *Language Learning*, *53*(S1)(Suppl. 1), 3–32. doi:10.1111/1467-9922.53222

Dörnyei, Z. (2005). *The psychology of the language learner: Individual differences in second language acquisition*. Mahwah, NJ: Lawrence Erlbaum.

Dörnyei, Z. (2007). *Research Methods in Applied Linguistics: Quantitative, qualitative, and mixed methodologies*. Oxford: Oxford University Press.

Dörnyei, Z. (2009a). The L2 motivational self system. In Z. Dörnyei & E. Ushioda (Eds.), *Motivation, language identity and the L2 self* (pp. 9–42). Bristol: Multilingual Matters.

Dörnyei, Z. (2009b). *The psychology of second language acquisition*. Oxford: Oxford University Press.

Dörnyei, Z., & Kubanyiova, M. (2014). *Motivating Learners, Motivating Teachers: Building vision in the language classroom*. Cambridge: Cambridge University Press.

Dörnyei, Z., & Otto, I. (1998). *Motivation in action: A process model of L2 motivation. Working Papers in Applied Linguistics, 4* (pp. 43–69). London: Thames Valley University.

Dörnyei, Z., & Ushioda, E. (2009). *Motivation, language, identity and the L2 self*. Multilingual Matters.

Dörnyei, Z., & Ushioda, E. (2011). *Teaching and researching motivation* (2nd ed). Harlow, UK: Pearson Education Limited.

Dumančić, D. (2018). Investigating boredom among EFL teachers. *ExELL*, *6*(1), 57–80. doi:10.2478/exell-2019-0006

Dunn, K. E., Airola, D. T., Lo, W.-J., & Garrison, M. (2013). Becoming data driven: The influence of teachers' sense of efficacy on concerns related to data-driven decision making. *Journal of Experimental Education*, *81*(2), 222–241. doi:10.1080/00220973.2012.699899

Eccles, J. S., & Midgley, C. (1989). State-environment fit: Developmentally appropriate classrooms for young adolescents. In C. Ames & R. Ames (Eds.), *Research on motivation in education, 3*. San Diego, CA: Academic Press.

Ellis, N. C., & Larsen-Freeman, D. (2006). Language emergence: Implications for applied linguistics—Introduction to the special issue. *Applied Linguistics*, *27*(4), 558–589. doi:10.1093/applin/aml028

Enders, C. K. (2010). *Applied missing data analysis*. New York: Guilford Press.

Eslami, Z. R., & Fatahi, A. (2008). Teachers' sense of self-efficacy, English proficiency, and instructional strategies: A study of nonnative EFL teachers in Iran. *TESL – E J*, *11*(4), 1–19.

Fives, H., & Alexander, P. A. (2004). *How schools shape teacher efficacy and commitment—Another piece on the achievement puzzle. Big Theories Revisited*, 329–359. Retrieved from <Go to ISI>://CCC:000230474800014.

Fredrickson, B. L. (2001). The role of positive emotions in positive psychology—The broaden-and-build theory of positive emotions. *American Psychologist*, *56*(3), 218–226. doi:10.1037//0003-066x.56.3.218

Freeman, D. (2002). The hidden side of the work: Teacher knowledge and learning to teach. A perspective from North American educational research on teacher education in English language teaching. *Language Teaching*, *35*(1), 1–13. doi:10.1017/S0261444801001720

Frenzel, A. C. (2014). Teacher emotions. In L. Linnenbrink-Garcia & R. Pekrun (Eds.), *Handbook of emotions in education* (pp. 494–519). New York: Routledge.

Frenzel, A. C., & Stephens, E. J. (2013). Emotions. In N. C. Hall & T. Goetz, *Emotion, motivation, and self-regulation: A handbook for teachers* (pp. 1–56). Bingley, UK: Emerald.

Frenzel, A., Goetz, T., Stephens, E. J., & Jacob, B. (2009). Antecedents and effects of teachers' emotional experiences: An integrated perspective and empirical test. In P. A. Schutz & M. Zembylas (Eds.), *Advances in Teacher Emotion Research: The impact on teachers' lives* (pp. 129–152). New York: Springer.

Frijda, N. H. (1986). The current status of emotion theory. *Bulletin of the British Psychological Society*, *39*, A75–A75. Retrieved from <Go to ISI>://WOS:A1986C479300082.

Gardner, R. C. (1985). *Social psychology and second language learning: The role of attitudes and motivation*. London: Edward Arnold.

Gardner, R. C. (2001). Integrative motivation and second language acquisition. In *Motivation and second language acquisition*. *Honolulu* Z. Dörnyei & R. Schmidt (Eds.). HI: University of Hawaii, Second Language Teaching & Curriculum Center, 1–19.

Gardner, R. C., & Lambert, W. E. (1959). Motivational variables in second-language acquisition. *Canadian Journal of Psychology*/Revue canadienne de psychologie, *13*(4), 26–72. doi:10.1037/h0083787

Gardner, R. C., & Lambert, W. E. (1972). *Attitudes and motivation in second language learning: MA: Newbury house*.

Gardner, R. C., & MacIntyre, P. D. (1993). On the measurement of affective variables in second language learning. *Language Learning*, *43*(2), 157–194. doi:10.1111/j.1467-1770.1992.tb00714.x

Gardner, R. C., & Tremblay, P. F. (1994). On motivation, research agendas, and theoretical frameworks. *Modern Language Journal*, *78*(3), 359–368. doi:10.1111/j.1540-4781.1994.tb02050.x

Garrett, P., & Young, R. F. (2009). Theorizing affect in foreign language learning: An analysis of one learner's responses to a communicative Portuguese course. *Modern Language Journal*, *93*(2), 209–226. doi:10.1111/j.1540-4781.2009.00857.x

Ghanizadeh, A., & Royaei, N. (2015). Emotional facet of language teaching: Emotion regulation and emotional labor strategies as predictors of teacher burnout. *International Journal of Pedagogies and Learning*, *10*(2), 139–150. doi:10.1080/22040552.2015.1113847

Ghasemboland, F. (2014). *Self-efficacy beliefs among English as a foreign language teachers in selected language centers* [Doctoral Thesis]. University of Malaya.

Ghasemboland, F., & Hashim, F. B. (2013). Teachers' self-efficacy beliefs and their English language proficiency: A study of nonnative EFL teachers in selected language centers. *Procedia - Social and Behavioral Sciences*, *103*, 890–899. doi:10.1016/j.sbspro.2013.10.411

Gibbs, C. (2002). *Effective teaching: Exercising self-efficacy and thought control of action*. Exeter University of Exeter.

Gibson, S., & Dembo, M. H. (1984). Teacher efficacy—A construct-validation. *Journal of Educational Psychology*, *76*(4), 569–582. doi:10.1037/0022-0663.76.4.569

Giles, H., & Byrne, J. L. (1982). An InterGroup Approach to Second Language Acquisition. *Journal of Multilingual and Multicultural Development*, *3*(1), 17–40. doi:10.1080/01434632.1982.9994069

Gkonou, C., & Miller, E. R. (2019). Caring and emotional labour: Language teachers' engagement with anxious learners in private language school classrooms. *Language Teaching Research*, *23*(3), 372–387. doi:10.1177/1362168817728739

Goetz, T. (2004). *Emotionales Erleben und selbstreguliertes Lernen bei Schülern im Fach Mathe-matik* [*Emotions and self-regulated learning of students in mathematics*]. Munich, Germany: Utz.

Goetz, T., Frenzel, A. C., Hall, N. C., & Pekrun, R. (2008). Antecedents of academic emotions: Testing the internal/external frame of reference model for academic enjoyment. *Contemporary Educational Psychology*, *33*(1), 9–33. doi:10.1016/j.cedpsych.2006.12.002

Goetz, T., Frenzel, A., Pekrun, R., & Hall, N. C. (2005). Emotional intelligence in the context of learning and achievement. In R. Schulze & R. D. Roberts (Eds.), *Emotional intelligence: An international handbook*. Cambridge, MA: Hogrefe & Huber Publishers.

Goetz, T., Nett, U. E., & Hall, N. C. (2013). Self-regulated learning. In N. C. Hall & T. Goetz (Eds.), *Emotion, motivation, and self-regulation: A handbook for teachers* (pp. 123–166). Bradford: Emerald Group Publishing.

Göker, S. D. (2006). Impact of peer coaching on self-efficacy and instructional skills in TEFL teacher education. *System*, *34*(2), 239–254. doi:10.1016/j.system.2005.12.002

Golombek, P. R., & Johnson, K. E. (2004). Narrative inquiry as a mediational space: Examining emotional and cognitive dissonance in second-language teachers' development. *Teachers and Teaching*, *10*(3), 307–327. doi:10.1080/1354060042000204388

Gong, S., Chai, X., Duan, T., Zhong, L., & Jiao, Y. (2013). Chinese teachers' emotion regulation goals and strategies. *Psychology*, *04*(11), 870–877. doi:10.4236/psych.2013.411125

Goodman, J. (1988). Constructing a practical philosophy of teaching—A study of preservice teachers professional perspectives. *Teaching and Teacher Education*, *4*(2), 121–137. doi:10.1016/0742-051X(88)90013-3

Grandey, A. A. (2000). Emotion regulation in the workplace: A new way to conceptualize emotional labor. *Journal of Occupational Health Psychology*, *5*(1), 95–110. doi:10.1037//1076-8998.5.1.95

Greenleaf, R. K. (2002). The adolescent brain: Still ready to learn. *Principal Leadership*, *2*(8), 24–25.

Gross, J. J. (1998). Antecedent- and response-focused emotion regulation: Divergent consequences for experience, expression, and physiology. *Journal of Personality and Social Psychology*, *74*(1), 224–237. doi:10.1037//0022-3514.74.1.224

Gross, J. J. (2002). Emotion regulation: Affective, cognitive, and social consequences. *Psychophysiology*, *39*(3), 281–291. doi:10.1017/s0048577201393198

Gross, J. J. (2015). *Handbook of emotion regulation* (2nd ed). New York: Guilford.

Gross, J. J., Richards, J. M., & John, O. P. (2006). Emotion regulation in everyday life. In D. K. Snyder, J. A. Simpson & J. N. Hughes (Eds.), *Emotion regulation in families: Pathways to dysfunction and health* (pp. 13–35). Washington, DC: American Psychological Association. Retrieved from http://scholarworks.gsu.edu/mcl_facpub/54.

Gumora, G., & Arsenio, W. F. (2002). Emotionality, emotion regulation, and school performance in middle school children. *Journal of School Psychology*, *40*(5), 395–413. doi:10.1016/S0022-4405(02)00108-5

Güngör, F., & Yaylı, D. (2012). Self-efficacy and anxiety perceptions of pre-service EFL teachers. In A. Akbarov & V. Cook (Eds.), *Approaches and methods in second and foreign language teaching* (pp. 1–10). Sarajevo: IBU Publications.

Guskey, T. R. (1988). Teacher efficacy, self-concept, and attitudes toward the implementation of instructional innovation. *Teaching and Teacher Education*, *4*(1), 63–69. doi:10.1016/0742-051X(88)90025-X

Hall, N. C., & Goetz, T. (2013). *Emotion, Motivation, and Self-Regulation: A handbook for teachers*. Emerald.

Hamman, D., Coward, F., Johnson, L., Lambert, M., Zhou, L., & Indiatsi, J. (2013). Teacher possible selves: How thinking about the future contributes to the formation of professional identity. *Self and Identity*, *12*(3), 307–336. doi:10.1080/15298868.2012.671955

Hargreaves, A. (2000). Mixed emotions: Teachers' perceptions of their interactions with students. *Teaching and Teacher Education*, *16*(8), 811–826. doi:10.1016/S0742-051X(00)00028-7

Harris, L. (2011). Secondary teachers' conceptions of student engagement: Engagement in learning or in schooling? *Teaching and Teacher Education*, *27*(2), 376–386. doi:10.1016/j.tate.2010.09.006

Heydarnejad, T., Fatemi, A., & Ghonsooly, B. (2017). An exploration of EFL teachers' teaching styles and emotions. *Journal of Applied Linguistics and Language Research*, *4*, 26–46.

Hidi, S., & Renninger, K. A. (2006). The four-phase model of interest development. *Educational Psychologist*, *41*(2), 111–127. doi:10.1207/s15326985ep4102_4

Higgins, E. T. (1987). Self-discrepancy—A theory relating self and affect. *Psychological Review*, *94*(3), 319–340. doi:10.1037/0033-295x.94.3.319

Higgins, E. T. (1996). Self-discrepancies as regulatory focus: Trade-offs of promoting accomplishments or preventing mistakes. *International Journal of Psychology*, *31*(3–4), 2051–2051. Retrieved from <Go to ISI>://WOS:A1996VE85700960.

Higgins, E. T. (1998). Promotion and prevention: Regulatory focus as a motivational principle. In M. P. Zanna (Ed.), *Advances in experimental social psychology*, *30*. New York: Academic Press.

Higgins, E. T., Klein, R., & Strauman, T. (1985). Self-concept discrepancy theory—A psychological model for distinguishing among different aspects of depression and anxiety. *Social Cognition*, *3*(1), 51–76. doi:10.1521/soco.1985.3.1.51

Hiver, P. (2013). The interplay of possible language teacher selves in professional development choices. *Language Teaching Research*, *17*(2), 210–227. doi:10.1177/1362168813475944

Hochschild, A. R. (1983). *The managed heart: Commercialization of human feeling*. Berkeley, CA: University of California Press.

Hong, J. Y. (2010). Pre-service and beginning teachers' professional identity and its relation to dropping out of the profession. *Teaching and Teacher Education*, *26*(8), 1530–1543. doi:10.1016/j.tate.2010.06.003

Horwitz, E. K. (1996). Even teachers get the blues: Recognizing and alleviating language teachers' feelings of foreign language anxiety. *Foreign Language Annals*, *29*(3), 365–372. doi:10.1111/j.1944-9720.1996.tb01248.x

Horwitz, E. K., Horwitz, M. B., & Cope, J. (1986). Foreign language classroom anxiety. *Modern Language Journal*, *70*(2), 125–132. doi:10.1111/j.1540-4781.1986.tb05256.x

Hoy, A. W., & Spero, R. B. (2005). Changes in teacher efficacy during the early years of teaching: A comparison of four measures. *Teaching and Teacher Education*, *21*(4), 343–356. doi:10.1016/j.tate.2005.01.007

Hoy, W. K., & Woolfolk, A. E. (1993). Teachers sense of efficacy and the organizational health of schools. *Elementary School Journal*, *93*(4), 355–372. doi:10.1086/461729

Hoyle, R. H., & Sherrill, M. R. (2006). Future orientation in the self-system: Possible selves, self-regulation, and behavior. *Journal of Personality*, *74*(6), 1673–1696. doi:10.1111/j.1467-6494.2006.00424.x

Hsieh, H. F., & Shannon, S. E. (2005). Three approaches to qualitative content analysis. *Qualitative Health Research*, *15*(9), 1277–1288. doi:10.1177/1049732305276687

Hu, L.-t., & Bentler, P. M. (1999). Cutoff criteria for fit indexes in covariance structure analysis: Conventional criteria versus new alternatives. *Structural Equation Modeling: A Multidisciplinary Journal*, *6*(1), 1–55. doi:10.1080/10705519909540118

Huitt, W., & Cain, S. (2005). An overview of the conative domain. In *Educational psychology interactive* (pp. 1–20). Valdosta, GA: Valdosta State University.

Humphrey, R. H., Ashforth, B. E., & Diefendorff, J. M. (2015). The bright side of emotional labor. *Journal of Organizational Behavior*, *36*(6), 749–769. doi:10.1002/job.2019

Imai, Y. (2010). Emotions in SLA: New insights From Collaborative Learning for an EFL classroom. *Modern Language Journal*, *94*(2), 278–292. doi:10.1111/j.1540-4781.2010.01021.x

Ipek, H. (2006). *Foreign language teaching anxiety* [Doctoral Thesis]. Eskişehir, Turkey: Anadolu University.

Jacob, B., Frenzel, A. C., & Stephens, E. J. (2017). Good teaching feels good—But what is "good teaching"? Exploring teachers' definitions of teaching success in mathematics. *ZDM*, 49(3), 461–473. doi:10.1007/s11858-017-0848-6

Jean, G., & Simard, D. (2011). Grammar teaching and learning in L2: Necessary, but boring? *Foreign Language Annals*, *44*(3), 467–494. doi:10.1111/j.1944-9720.2011.01143.x

Jiang, J., Vauras, M., Volet, S., & Wang, Y. (2016). Teachers' emotions and emotion regulation strategies: Self- and students' perceptions. *Teaching and Teacher Education, 54*, 22–31. doi:10.1016/j.tate.2015.11.008

Keller, J. M. (1983). Motivational design of instruction. In C. M. Reigelruth (Ed.), *Instructional design theories and models: An overview of their current status* (pp. 383–434). Hillsdale: Jeonju University: Lawrence Erlbaum.

Keller, M. M., Chang, M. L., Becker, E. S., Goetz, T., & Frenzel, A. C. (2014). Teachers' emotional experiences and exhaustion as predictors of emotional labor in the classroom: An experience sampling study. *Frontiers in Psychology*, *5*, 1442. doi:10.3389/fpsyg.2014.01442

Khajavy, G. H., Ghonsooly, B., Fatemi, A. H., & Frenzel, A. C. (2018). Antecedents of pleasant and unpleasant emotions of EFL teachers using an appraisal-theoretical framework. *Iranian Journal of Language Teaching Research*, *6*(2), 39–56. Retrieved from <Go to ISI>://WOS:000437662200004.

Kim, Y., & Kim, T. Y. (2018). Korean EFL teachers' emotional labor: An exploratory study. *English Language Teaching*, *30*(2), 21–41. doi:10.17936/pkelt.2018.30.2.2

King, J. (2016). It's time, put on the smile, it's time!: The emotional labour of second language teaching within a Japanese university. In C. Gkonou, D. Tatzl & S. Mercer (Eds.), *New directions in language learning psychology* (pp. 97–112). Dordrecht: Springer.

Kinman, G., Wray, S., & Strange, C. (2011). Emotional labour, burnout and job satisfaction in UK teachers: The role of workplace social support. *Educational Psychology*, *31*(7), 843–856. doi:10.1080/01443410.2011.608650

Klassen, R. M., Bong, M., Usher, E. L., Chong, W. H., Huan, V. S., Wong, I. Y. F., & Georgiou, T. (2009). Exploring the validity of a teachers' self-efficacy scale in five countries. *Contemporary Educational Psychology*, *34*(1), 67–76. doi:10.1016/j.cedpsych.2008.08.001

Koole, S. L. (2009). The psychology of emotion regulation: An integrative review. *Cognition and Emotion*, *23*(1), 4–41. doi:10.1080/02699930802619031

Kostic-Bobanovic, M., & Grgić, S. (2016). Novice and experienced foreign languages teacher's sense of efficacy and promoting citizenship education. In M. Radetić-Paić, I. Blažević & Đ. Zuliani (Eds.), *Competences of participants in citizenship education*. Sveučilište Jurja Dobrile u Puli (pp. 57-74), Pula, Hrvatska.

Krashen, S. (1982). *Principles and practice in second language acquisition*. Oxford: Pergamon Press.

Kubanyiova, M. (2006). Developing a motivational teaching practice in EFL teachers in Slovakia: Challenges of promoting teacher change in EFL contexts. *TESL – E J*, *10*(2). Retrieved from https://www.tesl-ej.org/wordpress/issues/volume10/ej38/ej38a5/.

Kubanyiova, M. (2007). *Teacher development in action: An empirically based model of promoting conceptual change in-service language teachers in Slovakia* [Doctoral Thesis]. Nottingham: University of Nottingham.

Kubanyiova, M. (2009). Possible selves in langauge teacher development. In Z. Dörnyei & E. Ushioda (Eds.), *Motivation, Langauge identity and the L2 self* (pp. 314–333). Bristol: Multilingual Matters.

Kubanyiova, M. (2012). *Teacher development in action understanding language teachers' conceptual change*. Palgrave MacMillan.

Kubanyiova, M. (2015). The role of teachers' future self guides in creating L2 development opportunities in teacher-led classroom discourse: Reclaiming the relevance of language teacher cognition. *Modern Language Journal*, *99*(3), 565–584. doi:10.1111/modl.12244

Kumazawa, M. (2013). Gaps too large: Four novice EFL teachers' self-concept and motivation. *Teaching and Teacher Education*, *33*, 45–55. doi:10.1016/j.tate.2013.02.005

Kunter, M., Frenzel, A., Nagy, G., Baumert, J., & Pekrun, R. (2011). Teacher enthusiasm: Dimensionality and context specificity. *Contemporary Educational Psychology*, *36*(4), 289–301. doi:10.1016/j.cedpsych.2011.07.001

Kunter, M., Tsai, Y.-M., Klusmann, U., Brunner, M., Krauss, S., & Baumert, J. (2008). Students' and mathematics teachers' perceptions of teacher enthusiasm and instruction. *Learning and Instruction*, *18*(5), 468–482. doi:10.1016/j.learninstruc.2008.06.008

Kyriacou, C., & Kunc, R. (2007). Beginning teachers' expectations of teaching. *Teaching and Teacher Education*, *23*(8), 1246–1257. doi:10.1016/j.tate.2006.06.002

Lavado, K. (2018). *Influences on the sources of teacher self-efficacy in a Lutheran School* [Doctoral Thesis]. Portland: Concordia University.

Lazarus, R. S. (1991). *Emotion and adaptation*. New York: Oxford University Press.

Lazarus, R. S. (2006). Emotions and interpersonal relationships: Toward a person-centered conceptualization of emotions and coping. *Journal of Personality*, *74*(1), 9–46. doi:10.1111/j.1467-6494.2005.00368.x

Lee, J. (2009). *Teachers' sense of efficacy in teaching English, perceived English language proficiency, and attitudes toward the English language: A case of Korean public elementary school teachers* [Doctoral Thesis]. Ohio State University.

Lee, M., Pekrun, R., Taxer, J. L., Schutz, P. A., Vogl, E., & Xie, X. (2016). Teachers' emotions and emotion management: Integrating emotion regulation theory with emotional labor research. *Social Psychology of Education*, *19*(4), 843–863. doi:10.1007/s11218-016-9359-5

Lee, M., & Van Vlack, S. (2018). Teachers' emotional labour, discrete emotions, and classroom management self-efficacy. *Educational Psychology*, *38*(5), 669–686. doi:10.1080/01443410.2017.1399199

Lim, H. Y. (2002). The interaction of motivation, perception, and environment: One EFL learner's experience. *Hong Kongr. Journal of Applied Linguistics*, *7*(2), 91–106.

Linnenbrink, E. A., & Pintrich, P. R. (2000). Multiple pathways to learning and achievement: The role of goal orientation in fostering adaptive motivation, affect, and cognition. In C. Sansone & J. M. Harackiewicz (Eds.), *Intrinsic and extrinsic motivation: The search for optimal motivation and performance* (pp. 195–227). Cambridge: Academic Press.

Locke, E. A., Frederick, E., Lee, C., & Bobko, P. (1984). Effect of self-efficacy, goals, and task strategies on task-performance. *Journal of Applied Psychology*, *69*(2), 241–251. doi:10.1037/0021-9010.69.2.241

Locke, E., & Latham, G. P. (1990). *A theory of goal setting and task performance*. Englewood Cliffs, NJ: Prentice Hall.

Loh, C. E., & Liew, W. M. (2016). Voices from the ground: The emotional labour of English teachers' work. *Teaching and Teacher Education*, *55*, 267–278. doi:10.1016/j.tate.2016.01.016

Lohbeck, A., Hagenauer, G., & Frenzel, A. C. (2018). Teachers' self-concepts and emotions: Conceptualization and relations. *Teaching and Teacher Education*, *70*, 111–120. doi:10.1016/j.tate.2017.11.001

Looney, L. (2003). *Understanding teachers' self-efficacy beliefs: The role of professional community* [Doctoral Dissertation]. MD: University of Maryland – College Park.

Lozanov, G. (1979). *Suggestology and suggestopedia: Theory and practice*. United Nations Educational, Scientific and Cultural Organization.

MacIntyre, P. D., & Gardner, R. C. (1991). Language anxiety: Its relationship to other anxieties and to processing in native and second languages. *Language Learning*, *41*(4), 513–534. doi:10.1111/j.1467-1770.1991.tb00691.x

Macintyre, P. D., & Legatto, J. J. (2011). A dynamic system approach to willingness to communicate: Developing an Idiodynamic method to capture rapidly changing affect. *Applied Linguistics*, *32*(2), 149–171. doi:10.1093/applin/amq037

MacIntyre, P. D., Mackinnon, S. P., & Clément, R. (2009). *From integrative motivation topossible selves: The baby, the bathwater and the future of language learning motivation research. North*. York, ON, Canada: Multilingual Matters.

Malmberg, L.-E. (2008). Student teachers' achievement goal orientations during teacher studies: Antecedents, correlates and outcomes. *Learning and Instruction*, *18*(5), 438–452. doi:10.1016/j.learninstruc.2008.06.003

Markus, H. (2006). Foreword. In C. Dunkel & J. Kerpelman (Eds.), *Possible selves theory, research and applications* (pp. xi–ix). New York: Nova Press.

Markus, H., & Nurius, P. (1986). Possible selves. *American Psychologist*, *41*(9), 954–969. doi:10.1037/0003-066X.41.9.954

Markus, H., & Ruvolo, A. (1989). Possible selves: Personalized representations of goals. In L. A. Pervin (Ed.), *Goal concepts in personality and social psychology* (pp. 211–241). Lawrence Erlbaum Associates, Incorp.

Martinović, A. (2013). Testing the L2MSS among Croatian university students: A pilot study. Paper presented at the UZRT 2012: Empirical Studies in English Applied Linguistics, Zagreb.

Martinovic, A. (2018). The L2 motivational self system: Differences among learners. *Jezikoslovlje*, *19*(1), 133–157. Retrieved from <Go to ISI>://WOS:000437430800008.

Maynard, S. K. (2002). *Linguistic emotivity: Centrality of place, the topic-comment dynamic, and an ideology of pathos in Japanese discourse, 97*. John Benjamins Publishing.

Melendy, G. A. (2008). Motivating writers: The power of choice. *Asian EFL Journal*, *10*(3), 11.

Metcalfe, J., & Mischel, W. (1999). A hot/cool-system analysis of delay of gratification: Dynamics of willpower. *Psychological Review*, *106*(1), 3–19. doi:10.1037/0033-295x.106.1.3

Mihaljević Djigunović, J. (2002). *Strah od stranog jezika—Kako nastaje, kako se očituje i kako ga se osloboditi*. [*Zagreb: Naklada ljevak*].

Mihaljević Djigunović, J. (2004). *Beyond language anxiety. SRAZ YLIX*, 201–212.

Miller, M. (2015). *Teachers' emotion regulation as a protective factor against burnout* [Master's Thesis]. Vancouver: University of British Columbia.

Mills, N., & Allen, H. (2007). Teacher self-efficacy of graduate teaching assistants of French. In H. J. Siskin (Ed.), *Aausc 2007: From thought to action: Exploring beliefs and outcomes in the foreign language program* (pp. 213–234): Heinle.

Minett, R. (2015). *A qualitative study investigating the sources of teacher efficacy beliefs*. [Doctoral dissertation]. School of Education and Lifelong Learning, University of East Anglia.

Mischel, W., & Ayduk, O. (2004). Willpower in a cognitive-affective processing system: The dynamics of delay of gratification. In R. F. Baumeister & K. D. Vohs (Eds.), *Handbook of self-regulation: Research, theory, and applications* (pp. 99–129). New York: Guilford Press.

Modell, A. H. (2003). *Imagination and the meaningful brain*. Cambridge, MA: MIT Press.

Moè, A., Pazzaglia, F., & Ronconi, L. (2010). When being able is not enough. The combined value of positive affect and self-efficacy for job satisfaction in teaching. *Teaching and Teacher Education*, *26*(5), 1145–1153. doi:10.1016/j.tate.2010.02.010

Morris, J. A., & Feldman, D. C. (1996). The dimensions, antecedents, and consequences of emotional labor. *Academy of Management Review*, *21*(4), 986–1010. doi:10.5465/amr.1996.9704071861

Mousavi, E. S. (2007). teacher stress' in non-native and native teachers of EFL. *Exploring. English Language Teacher Education and Development*, *10*, 33–41.

Näring, G., Briët, M., & Brouwers, A. (2006). Beyond demand-control: Emotional labour and symptoms of burnout in teachers. *Work and Stress*, *20*(4), 303–315. doi:10.1080/02678370601065182

Neves de Jesus, S. N., & Lens, W. (2005). An integrated model for the study of teacher motivation. *Applied Psychology*, *54*(1), 119–134. doi:10.1111/j.1464-0597.2005.00199.x

Nias, J. (1996). Thinking about feeling: The emotions in teaching. *Cambridge Journal of Education*, *26*(3), 293–306. doi:10.1080/0305764960260301

Nykliček, I., Vingerhoets, A., & Zeelenberg, M. (2011). *Emotion regulation and well-being*. Springer Science+Business Media.

O'Malley, J. M., & Chamot, A. (1990). *Strategies used by second language learners*. Cambridge: Cambridge University Press.

Oakes, L., & Howard, M. (2019). Learning French as a foreign language in a globalised world: An empirical critique of the L2 Motivational Self System. *International Journal of Bilingual Education and Bilingualism*, 1–17. doi:10.1080/13670050.2019.1642847

Oxford, R. (1990). *Language learning strategies: What every teacher should know. University of Alabama, Boston*. Heinle & Heinle Publications.

Oxford, R. L. (1994). Where are we regarding language learning motivation. *Modern Language Journal*, *78*(4), 512–514. doi:10.1111/j.1540-4781.1994.tb02069.x

Oxford, R., & Shearin, J. (1994). Language-learning motivation—Expanding the theoretical framework. *Modern Language Journal*, *78*(1), 12–28. doi:10.1111/j.1540-4781.1994.tb02011.x

Pajares, F. (1996). Self-Efficacy Beliefs in Academic Settings. *Review of Educational Research*, *66*(4), 543–578. doi:10.3102/00346543066004543

Pajares, F., Johnson, M. J., & Usher, E. L. (2007). Sources of writing self-efficacy beliefs of elementary, middle, and high school students. *Research in the Teaching of English*, *42*(1), 104–120. Retrieved from <Go to ISI>://WOS:000248816100004.

Pajares, F., & Urdan, T. (2006). *Self-efficacy beliefs of adolescents*. Information Age Publishing.

Pajares, M. F. (1992). Teachers' beliefs and educational research: Cleaning up a messy construct. *Review of Educational Research*, *62*(3), 307–332. doi:10.3102/00346543062003307

Paris, S. G., & Winograd, P. (2003). *The role of self-regulated learning in contextual teaching: Principles for teacher preparation*. Washington, DC.

Pekrun, R. (2000). A social-cognitive, control-value theory of achievement emotions. In J. Heckhausen (Ed.), *Advances in psychology, 131. Motivational psychology of human development: Developing motivation and motivating development* (pp. 143–163). Elsevier Science.

Pekrun, R. (2006). The control-value theory of achievement emotions: Assumptions, corollaries, and implications for educational research and practice. *Educational Psychology Review*, *18*(4), 315–341. doi:10.1007/s10648-006-9029-9

Pekrun, R., Frenzel, A. C., Goetz, T., & Perry, R. P. (2007). The control-value theory of achievement emotions: An integrative approach to emotions in education. In P. A. Schutz & R. Pekrun (Eds.), Educational Psychology Series, *Emotion in education* (pp. 13–36). Elsevier Academic Press.

Pekrun, R., & Linnenbrink-Garcia, L. (Eds.). (2014). Educational Psychology Handbook Series. *International handbook of emotions in education*. Routledge/Taylor & Francis Group.

Pekrun, R., Muis, K. R., Frenzel, A. C., & Goetz, T. (2018). *Emotions at school*. Routledge.

Pekrun, R., & Stephens, E. J. (2009). Goals, emotions, and emotion regulation: Perspectives of the control-value theory. *Human Development*, *52*(6), 357–365. doi:10.1159/000242349

Pennington, M. (1995). Work satisfaction, motivation, and commitment in teaching English as a second language manuscript. Luton, UK: University of Luton.

Petrie, G. M., & Darragh, J. J. (2018). 'This worry machine': The impact of executive orders on ELL teachers. *TESOL Journal*, *9*(3), 412–430. doi:10.1002/tesj.403

Philipp, A., & Schüpbach, H. (2010). Longitudinal effects of emotional labour on emotional exhaustion and dedication of teachers. *Journal of Occupational Health Psychology*, *15*(4), 494–504. doi:10.1037/a0021046

Phillips, S., & Borg, S. (2007). Exploring the relationship between teachers' beliefs and their classroom practice. *Teacher Trainer*, *21*(3), 17–19.

Pintrich, P. R., & de Groot, E. V. (1990). Motivational and self-regulated learning components of classroom academic-performance. *Journal of Educational Psychology*, *82*(1), 33–40. doi:10.1037/0022-0663.82.1.33

Pintrich, P. R., & Schunk, D. H. (1996). *Motivation in education: Theory, research, and applications*. Englewood Cliffs, NJ: Prentice Hall.

Pishghadam, R., Zabetipour, M., & Aminzadeh, A. (2016). Examining emotions in English language learning classes: A case of EFL emotions. *Issues in Educational Research*, *26*(3), 508–527. Retrieved from <Go to ISI>://WOS:000391010700009.

Quoidbach, J., Berry, E. V., Hansenne, M., & Mikolajczak, M. (2010). Positive emotion regulation and well-being: Comparing the impact of eight savoring and dampening strategies. *Personality and Individual Differences*, *49*(5), 368–373. doi:10.1016/j.paid.2010.03.048

Rahimi, A., & Bigdeli, R. A. (2014). The broaden-and-build theory of positive emotions in second language learning. In. *Procedia - Social and Behavioral Sciences*, 5th World Conference on Psychology, Counseling and Guidance, Wcpcg-2014 D. Miljkovic (Ed.), *159*. doi:10.1016/j.sbspro.2014.12.451

Rahmati, T., Sadeghi, K., & Ghaderi, F. (2019). English language teachers' vision and motivation: Possible selves and activity theory perspectives. *RELC Journal*, *50*(3), 457–474. doi:10.1177/0033688218777321

Rastegar, M., & Memarpour, S. (2009). The relationship between emotional intelligence and self-efficacy among Iranian EFL teachers. *System*, *37*(4), 700–707. doi:10.1016/j.system.2009.09.013

Raynor, J. O. (1974). Future orientation in the study of achievement motivation. In J. W. Atkinson & J. O. Raynor (Eds.), *Motivation and achievement* (pp. 121–154). Washington, DC: Winston & Sons.

Raynor, J. O., & Entin, E. E. (1983). The function of future orientation as a determinant of human-behavior in STEP-PATH theory of action. *International Journal of Psychology*, *18*(1–4), 463–487. doi:10.1080/00207598308247494

Reeve, J. (2009). *Understanding motivation and emotion* (5th ed). Hoboken, (NJ): John Wiley & Sons.

Richardson, P. W., & Watt†, H. M. G. (2006). Who chooses teaching and why? Profiling characteristics and motivations across three Australian universities. *Asia-Pacific Journal of Teacher Education*, *34*(1), 27–56. doi:10.1080/13598660500480290

Richardson, V. (1996). The role of attitudes and beliefs in learning to teach. In J. Sikula, T. J. Buttery & E. Guyton (Eds.), *Handbook of research in teacher education* (2nd ed) (pp. 102–119). New York: Macmillan.

Riggs, I. M., & Enochs, L. G. (1990). Toward the development of an elementary teacher's science teaching efficacy belief instrument. *Science Education*, *74*(6), 625–637. doi:10.1002/sce.3730740605

Ross, A. (2015). *An exploration of the emotions and motivation of tertiary English language learners in Australia* [Doctoral Dissertation]. Faculty of Arts and Design, University of Canberra.

Rotter, J. B. (1954). *Social learning and clinical psychology*. New York: Prentice Hall.

Ruohotie-Lyhty, M., Korppi, A., Moate, J., & Nyman, T. (2018). Seeking understanding of foreign language teachers' shifting emotions in relation to pupils. *Scandinavian Journal of Educational Research*, *62*(2), 272–286. doi:10.1080/00313831.2016.1258659

Samson, A. C., & Gross, J. J. (2012). Humour as emotion regulation: The differential consequences of negative versus positive humour. *Cognition and Emotion*, *26*(2), 375–384. doi:10.1080/02699931.2011.585069

Saville-Troike, M. (2012). *Introducing second language acquisition*. Cambridge: Cambridge University Press.

Scherer, K. R. (2005). What are emotions? And how can they be measured? *Social Science Information*, *44*(4), 695–729. doi:10.1177/0539018405058216

Schmeichel, B. J., & Baumeister, R. F. (2004). Self-regulatory strength. In R. F. Baumeister & K. D. Vohs (Eds.), *Handbook of self-regulation: Research, theory, and applications* (pp. 84–98). New York: Guilford Press.

Schmitz, G. S., & Schwarzer, R. (2000). Perceived self-efficacy of teachers: Longitudinal findings with a new instrument. *Zeitschrift für Pädagogische Psychologie*, *14*(1), 12–25. doi:10.1024/1010-0652.14.1.12

Schumann, J. H. (1978). The acculturation model for second language acquisition. In R. C. Gingras (Ed.), *Second language acquisition and foreign language teaching*. Washington, DC: Center for Applied Linguistics.

Schumann, J. H. (1986). Research on the acculturation model for 2nd language-acquisition. *Journal of Multilingual and Multicultural Development*, *7*(5), 379–392. doi:10.1080/01434632.1986.9994254

Schumann, J. H. (2001). Appraisal psychology, neurobiology, and language. *Annual Review of Applied Linguistics*, *21*, 23–42. doi:10.1017/S0267190501000022

Schunk, D. H. (1995). Self-efficacy, motivation, and performance. *Journal of Applied Sport Psychology*, *7*(2), 112–137. doi:10.1080/10413209508406961

Schunk, D. H., & Hanson, A. R. (1985). Peer models—Influence on children's self-efficacy and achievement. *Journal of Educational Psychology*, *77*(3), 313–322. doi:10.1037/0022-0663.77.3.313

Schunk, D. H., Hanson, A. R., & Cox, P. D. (1987). Peer-model attributes and children's achievement behaviors. *Journal of Educational Psychology*, *79*(1), 54–61. doi:10.1037/0022-0663.79.1.54

Schunk, D. H., Pintrich, P. R., & Meece, J. L. (2008). *Motivation in education: Theory, research, and application (3"^ ed.)*. Upper Saddle River, NJ: Merrill/Prentice Hall.

Schutz, P. A., Aultman, L. P., & Williams-Johnson, M. R. (2009). Educational psychology perspectives on teachers' emotions. In P. A. Schutz & M. Zembylas (Eds.), *Advances in teacher emotion research: The impact on teachers' lives* (pp. 195–214). New York: Springer Publishing.

Schutz, P. A., Cross, D. I., Hong, J. Y., & Osbon, J. N. (2007). Teacher identities, beliefs, and goals related to emotions in the classroom. In P. A. Schutz & R. Pekrun (Eds.), Educational Psychology Series, *Emotion in education* (pp. 223–241). doi:10.1016/B978-012372545-5/50014-9. Elsevier Academic Press.

Schutz, P. A., & Davis, H. A. (2000). Emotions and self-regulation during test taking. *Educational Psychologist*, *35*(4), 243–256. doi:10.1207/S15326985EP3504_03

Schutz, P. A., & Lanehart, S. L. (2002). Introduction: Emotions in education. *Educational Psychologist*, *37*(2), 67–68. doi:10.1207/S15326985EP3702_1

Schutz, P. A., & Lee, M. (2014). Teacher emotion, emotional labor and teacher identity. *Utrecht Studies in Language and Communication*, *27*, 169–186.

Schutz, P. A., Quijada, P. D., de Vries, S., & Lynde, M. (2011). Emotion in educational context. In S. Järvelä (Ed.), *Social and emotional aspects of learning* (pp. 64–69). Oxford: Elsevier.

Schutz, P., & Zembylas, M. (2009). *Advances in teacher emotion*. Research: Springer.

Scovel, T. (1978). Effect of affect on foreign-language learning—Review of the anxiety research. *Language Learning*, *28*(1), 129–142. doi:10.1111/j.1467-1770.1978.tb00309.x

Sealey, A., & Carter, B. (2004). *Applied linguistics as social science*. London: Continuum.

Segal, H. G. (2006). Possible Selves, fantasy distortion, and the anticipated life history: Exploring the role of imagination in social cognition. In C. Dunkel & J. Kerpelman (Eds.), *Possible selves: Theory, research and reflections* (pp. 79–96). New York: Nova Science Publishers.

Shim, J. W. (2001). *The efficacy beliefs of Korean teachers of English as a foreign language* [Doctoral Thesis]. Columbus, OH: Ohio State University Press.

Shoaib, A., & Dörnyei, Z. (2005). Affect in life-long learning: Exploring L2 motivation as a dynamic process. In P. Benson & D. Nunan (Eds.), *Learners' stories: Difference and diversity in language learning* (pp. 22–41). Cambridge: Cambridge University Press.

Shuman, V., & Scherer, K. R. (2014). Concepts and structures of emotions. In R. Pekrun & L. Linnenbrink-Garcia (Eds.), Educational Psychology Handbook Series, *International handbook of emotions in education* (pp. 13–35). Routledge/Taylor & Francis Group.

Skaalvik, E. M., & Skaalvik, S. (2010). Teacher self-efficacy and teacher burnout: A study of relations. *Teaching and Teacher Education*, *26*(4), 1059–1069. doi:10.1016/j.tate.2009.11.001

Skehan, P. (1989). *Individual differences in second language learning*. London: Edward Arnlod.

Smith-Justice, E. M. (2017). *Foreign Language Teacher Self-Efficacy: A descriptive study of high-school foreign language teachers in central Appalachia* [Doctoral Dissertation]. Graduate School of the Ohio State University.

Soodak, L. C., & Podell, D. M. (1996). Teacher efficacy: Toward the understanding of a multi-faceted construct. *Teaching and Teacher Education*, *12*(4), 401–411. doi:10.1016/0742-051X(95)00047-N

Sorić, I., Burić, I., Slišković, A. M., & Macuka, I. (2016). A kako se učitelji osjećaju? *Kvalitativna analiza pojavnosti i izvora emocionalnih iskustava predmetnih učitelja*, presented at 2. Dani Ramira i Zorana Bujasa. Zagreb

Stephanou, G., Gkavras, G., & Doulkeridou, M. (2013). The role of teachers' self- and collective-efficacy beliefs on their job satisfaction and experienced emotions in school. *Psychology*, *04*(3), 268–278. doi:10.4236/psych.2013.43A040

Stuart, C., & Thurlow, D. (2000). Making it their own: Preservice teachers' experiences, beliefs, and classroom practices. *Journal of Teacher Education*, *51*(2), 113–121. doi:10.1177/002248710005100205

Sutton, R. E. (2004). Emotion regulation goals and strategies of teachers. *Social Psychology of Education*, *7*(4), 379–398. doi:10.1007/s11218-004-4229-y

Sutton, R. E., & Harper, E. (2009). Teachers' emotion regulation. In L. J. Saha & A. G. Dworkin (Eds.), *International handbook of research on teachers and teaching* (pp. 389–401). New York: Springer.

Sutton, R. E., Mudrey-Camino, R., & Knight, C. C. (2009). Teachers' emotion regulation and classroom management. *Theory into Practice*, *48*(2), 130–137+. doi:10.1080/00405840902776418

Sutton, R. E., & Wheatley, K. F. (2003). Teachers' emotions and teaching: A review of the literature and directions for future research. *Educational Psychology Review*, *15*(4), 327–358. doi:10.1023/A:1026131715856

Swain, M. (2013). The inseparability of cognition and emotion in second language learning. *Language Teaching*, *46*(2), 195–207. doi:10.1017/S0261444811000486

Swanson, P. B. (2013). From teacher training through the first year on the job: Changes in foreign language teacher efficacy. *Electronic Journal of Foreign Language Teaching*, *10*(1), 5–16.

Swanson, P., & Huff, R. (2010). *Georgia's rural foreign language teachers' sense of efficacy and how it relates to teacher attrition* p. 54. World Languages and Cultures Faculty Publications.

Taguchi, T., Magid, M., & Papi, M. (2009). The L2 motivational self system among Japanese, Chinese, and Iranian learners of English. In Z. Dörnyei & E. Ushioda (Eds.), *Motivation, language identity and the L2 self* (pp. 66–97). Bristol: Multilingual Matters.

Talbot, K. R., & Mercer, S. (2019). *Being and emotional regulation in the United States, Japan and Austria*. Chinese Journal of Applied Linguistics 41(4) (pp. 410–432). Well, The Netherlands: Exploring University ESL/EFL Teachers' Emotional.

Taxer, J. L., & Frenzel, A. C. (2015). Facets of teachers' emotional lives: A quantitative investigation of teachers' genuine, faked, and hidden emotions. *Teaching and Teacher Education*, *49*, 78–88. doi:10.1016/j.tate.2015.03.003

Tejeda, S. A., Gillings de Gonzalez, B. S., & Lopez Martinez, C. L. d. J. (2016). How novice EFL teachers regulate their negative emotions. How-a Colombian. *Journal for Teachers of English*, *23*(1), 30–48. doi:10.19183/how.23.1.299

Thiruchselvam, R., Hajcak, G., & Gross, J. J. (2012). Looking inward: Shifting attention within working memory representations alters emotional responses. *Psychological Science*, *23*(12), 1461–1466. doi:10.1177/0956797612449838

Thompson, G. (2016). *Japanese high school English teachers' self-efficacy beliefs about teaching English* [Doctoral Thesis]. Queensland University of Technology.

Thompson, R. A. (1994). Emotion regulation: A theme in search of definition. *Monographs of the Society for Research in Child Development*, *59*(2–3), 25–52. doi:10.2307/1166137

Thorsen, C., Henry, A., & Cliffordson, C. (2017). The case of a missing person? The current L2 self and the L2 Motivational Self System. *International Journal of Bilingual Education and Bilingualism*, *23*(5), 584–600. doi:10.1080/13670050.2017.1388356

Timmer, D. A., Aguilar Río, J. I., & Schneider, R. (2015). Emotional reflexivity in pre-service language teacher education as a sociocultural learning goal. Retrieved from https://hal.archives-ouvertes.fr/hal-01216383/document. Retrieved from https://hal.archives-ouvertes.fr/hal-01216383/document

Toraby, E., & Modarresi, G. (2018). EFL teachers' emotions and learners' views of teachers' pedagogical success. *International Journal of Instruction*, *11*(2), 513–526. doi:10.12973/iji.2018.11235a

Toussi, M. T. M., Boori, A. A., & Ghanizadeh, A. (2011). The role of EFL teachers' self-regulation in effective teaching. *World Journal of Education*, *1*(2), 39–48. doi:10.5430/wje.v1n2p39

Tremblay, P. F., & Gardner, R. C. (1995). Expanding the motivation construct in language-learning. *Modern Language Journal*, *79*(4), 505–518. doi:10.1111/j.1540-4781.1995.tb05451.x

Tschannen-Moran, M., & Hoy, A. W. (2001). Teacher efficacy: Capturing an elusive construct. *Teaching and Teacher Education*, *17*(7), 783–805. doi:10.1016/S0742-051X(01)00036-1

Tschannen-Moran, M., & Hoy, A. W. (2007). The differential antecedents of self-efficacy beliefs of novice and experienced teachers. *Teaching and Teacher Education*, *23*(6), 944–956. doi:10.1016/j.tate.2006.05.003

Tschannen-Moran, M., Hoy, A. W., & Hoy, W. K. (1998). Teacher efficacy: Its meaning and measure. *Review of Educational Research*, *68*(2), 202–248. doi:10.3102/00346543068002202

Tsouloupas, C. N., Carson, R. L., Matthews, R., Grawitch, M. J., & Barber, L. K. (2010). Exploring the association between teachers' perceived student misbehaviour and emotional exhaustion: The importance of teacher efficacy beliefs and emotion regulation. *Educational Psychology*, *30*(2), 173–189. doi:10.1080/01443410903494460

Ushioda, E. (1994). L2 motivation as a qualitative construct. *Teanga*, *14*, 76–84.

Ushioda, E. (1996). Developing a dynamic concept of L2 motivation. In T. Hickey & J. Williams (Eds.), *Language, education, and society in a changing world* (pp. 239–245). Dublin, Ireland: IRAAL/Multilingual Matters.

Ushioda, E. (1998). Effective motivational thinking: A cogntive theoretical approach to the study of language learning motivation. In E. A. Soler & V. C. Espurz (Eds.), *Current issues in English language methodology* (pp. 77–89). Castelló de la Plana, Spain: Publicacions de la Universitat Jaume I.

Ushioda, E. (2001). Language learning at university: Exploring the role of motivational thinking. *Motivation and Second Language Acquisition*, *23*, 93–125.

Ushioda, E. (2009). A person-in-context relational view of emergent motivation, self and identity. In Z. Dörnyei & E. Ushioda (Eds.), *Motivation, language identity and the L2 self* (pp. 215–228). Bristol: Multilingual Matters.

Ushioda, E. (2011). Language learning motivation, self and identity: Current theoretical perspectives. *Computer Assisted Language Learning*, *24*(3), 199–210. doi:10.1080/09588221.2010.538701

Van den Berg, R. (2002). Teachers' meanings regarding educational practice. *Review of Educational Research*, *72*(4), 577–625. doi:10.3102/00346543072004577

Watt, H. M. G., & Richardson, P. W. (2008). Motivations, perceptions, and aspirations concerning teaching as a career for different types of beginning teachers. *Learning and Instruction*, *18*(5), 408–428. doi:10.1016/j.learninstruc.2008.06.002

Weiner, B. (1985). An attributional theory of achievement motivation andemotion. *Psychological Review*, *97*, 548–573.

Weiner, B. (1986). *An attributional theory of motivation and emotion*. New York: Springer-Verlag.

Wenger, E. (1998). *Communities of practice: Learning, meaning, and identity*. Cambridge: Cambridge University Press.

White, C., & Pham, C. (2017). Time in the experience of agency and emotion in English language learning in rural Vietnam. *Innovation in Language Learning and Teaching*, *11*(3), 207–218. doi:10.1080/17501229.2017.1317256

Wiener, N. (1948). *Cybernetics: Or control and communication in the animal and the machine*. Cambridge, MA: MIT Press.

Williams, M., & Burden, R. L. (1997). *Psychology for language teachers*. Cambridge: Cambridge University Press.

Williams-Johnson, M., Hong, D., Aultman, J., Osbon, L., J., & Schutz, P. (2008). *'There Are No Emotions in Math': How teachers approach emotions in the classroom* [Teachers College record], *110*(8) (pp. 1574–1610). Retrieved from <Go to ISI>://WOS:000269695600003.

Winograd, K. (2003). The functions of teacher emotions: The good, the bad, and the ugly [Teachers College record]. *Teachers College Record*, *105*(9), 1641–1673. doi:10.1046/j.1467-9620.2003.00304.x

Wolff, D., & DeCosta, P. I. (2017). Expanding the language teacher identity landscape: An investigation of the emotions and strategies of a NNEST. *The Modern Language Journal*, *101*(S1), 76–90. doi:10.1111/modl.12370

Woolfolk, A. E., & Hoy, W. K. (1990). Prospective teachers' sense of efficacy and beliefs about control. *Journal of Educational Psychology*, *82*(1), 81–91. doi:10.1037/0022-0663.82.1.81

Xu, Y. (2013). Language teacher emotion in relationships: A multiple case study. In X. Zhu & K. Zeichner (Eds.), *Preparing teachers for the 21st century* (pp. 371–393). New York: Springer.

Yilmaz, C. (2011). Teachers' perceptions of self-efficacy, English proficiency, and instructional strategies. *Social Behavior and Personality*, *39*(1), 91–100. doi:10.2224/sbp.2011.39.1.91

Yin, H. (2012). Adaptation and validation of the teacher emotional labour strategy scale in China. *Educational Psychology*, *32*(4), 451–465. doi:10.1080/01443410.2012.674488

Yin, H., Huang, S., & Lee, J. C. K. (2017). Choose your strategy wisely: Examining the relationships between emotional labor in teaching and teacher efficacy in Hong Kong primary schools. *Teaching and Teacher Education*, *66*, 127–136. doi:10.1016/j.tate.2017.04.006

Yin, H.-b., Lee, J. C. K., Zhang, Z.-h., & Jin, Y.-l. (2013). Exploring the relationship among teachers' emotional intelligence, emotional labor strategies and teaching satisfaction. *Teaching and Teacher Education*, *35*, 137–145. doi:10.1016/j.tate.2013.06.006

Yin, H.-b., & Lee, J. C.-K. (2012). Be passionate, but be rational as well: Emotional rules for Chinese teachers' work. *Teaching and Teacher Education*, *28*(1), 56–65. doi:10.1016/j.tate.2011.08.005

Yowell, C. M. (2002). Dreams of the future: The pursuit of education and career possible selves among ninth grade Latino youth. *Applied Developmental Science*, *6*(2), 62–72. doi:10.1207/S1532480XADS0602_2

Zakeri, A., & Alavi, M. (2011). English language teachers' knowledge and their self-efficacy. *Journal of Language Teaching and Research*, *2*(2), 413–419. doi:10.4304/jltr.2.2.413-419

Zapf, D., Vogt, C., Seifert, C., Mertini, H., & Isic, A. (1999). Emotion work as a source of stress: The concept and development of an instrument. *European Journal of Work and Organizational Psychology*, *8*(3), 371–400. doi:10.1080/135943299398230

Zeidner, M. (1998). *Test anxiety: The state of the art*. New York: Plenum Press.

Zembylas, M. (2003). Interrogating "teacher identity": Emotion, resistance, and selfformation. *Educational Theory*, *53*(1), 107–127. doi:10.1111/j.1741-5446.2003.00107.x

Zembylas, M. (2007). Theory and methodology in researching emotions in education. *International Journal of Research and Method in Education*, *30*(1), 57–72. doi:10.1080/17437270701207785

Zimmerman, B. J. (2000). Attaining self-regulation: A social cognitive perspective. In M. Boekaerts, P. R. Pintrich & M. Zeidner (Eds.), *Handbook of self-regulation* (pp. 13–39). Cambridge: Academic Press.

Zimmerman, B. J., Bandura, A., & Martinez-Pons, M. (1992). Self-motivation for academic attainment—The role of self-efficacy beliefs and personal goal-setting. *American Educational Research Journal*, *29*(3), 663–676. doi:10.3102/00028312029003663

APPENDICES

APPENDIX A. – The Six-Part Questionnaire

Dear colleague,

Thank you for taking the time to complete this survey. The present questionnaire is designed to investigate some motivational and emotional aspects of foreign language teaching. Please note that the answers you provide will be used for research purposes only and by agreeing to partake in this survey you are giving your informed consent. Your responses are completely anonymous and they will be analyzed on a group level, so try to answer the questions as honestly as possible. There are no right or wrong answers.

I. General information

Gender (circle): M F

Age: _____

Years of working experience: _____

Place of employment (circle): primary school secondary school

Other (please specify) _____

II. We are interested in how you perceive yourself as a foreign language teacher. Please use the scale below to indicate agreement with the items given. Carefully read the statements and evaluate to what extent they apply to you. Circle one number on a scale of 1 to 5.

1	2	3	4	5
Strongly disagree	Disagree	Neither agree nor disagree	Agree	Strongly agree

1. I see myself as someone who is appreciated and respected by the students.	1 2 3 4 5
2. If I do not appear motivated and engaged when teaching English, I will disappoint my students.	1 2 3 4 5
3. I do not employ new methods in my classroom for fear of not meeting my students' expectations.	1 2 3 4 5
4. I imagine myself using English proficiently in class.	1 2 3 4 5
5. I try to showcase a good mastery of English in every class so I do not lose my students' respect.	1 2 3 4 5
6. I can imagine myself speaking English as if I were a native speaker of English.	1 2 3 4 5
7. I thoroughly revise the teaching content before class because I do not want to appear as less knowledgeable in front of my	1 2 3 4 5

students.	
8. I can imagine myself as an expert teacher who is skilled at using different methods and approaches.	1 2 3 4 5

III. This questionnaire is designed to help us gain a better understanding of the kinds of things that create difficulties for teachers in their school activities. Please indicate your opinion about each of the statements below.

1 2 3 4 5 6 7 8 9

Nothing Very little Some influence Quite a bit A great deal

How confident are you that you can…	
1. provide an alternative explanation or example when students are confused?	1 2 3 4 5 6 7 8 9
2. get students to believe they can do well on school work?	1 2 3 4 5 6 7 8 9
3. assist families in helping their children do well in school?	1 2 3 4 5 6 7 8 9
4. get children to follow classroom rules?	1 2 3 4 5 6 7 8 9
5. craft good questions for your students?	1 2 3 4 5 6 7 8 9
6. use a variety of assessment strategies?	1 2 3 4 5 6 7 8 9
7. implement alternative strategies in your classroom?	1 2 3 4 5 6 7 8 9
8. help your students value learning?	1 2 3 4 5 6 7 8 9
9. establish a classroom management system with each group of students?	1 2 3 4 5 6 7 8 9
10. calm a student who is disruptive or noisy?	1 2 3 4 5 6 7 8 9
11. motivate students who show low interest in school work?	1 2 3 4 5 6 7 8 9
12. control disruptive behavior in the classroom?	1 2 3 4 5 6 7 8 9

IV. The following questions aim to investigate your efficacy beliefs as foreign language teachers. Please use the following scale to answer the following statements. Circle the number that best describes how sure you are that you can perform each of the activities below.

0 10 20 30 40 50 60 70 80 90 100

Cannot do at all — Moderately Certain can do — Highly certain can do

How much confidence to…	
1. help your students learn at highest levels of the language(s) you teach?	0 10 20 30 40 50 60 70 80 90 100
2. have a conversation with a native speaker in the language(s) you teach?	0 10 20 30 40 50 60 70 80 90 100
3. motivate your students to learn about the language(s) you teach?	0 10 20 30 40 50 60 70 80 90 100
4. to fully understand a movie that only uses the language(s) you teach?	0 10 20 30 40 50 60 70 80 90 100
5. help your students learn at the first-year level of the language(s) you teach?	0 10 20 30 40 50 60 70 80 90 100
6. to read and understand a newspaper printed in another country in the language(s) you teach?	0 10 20 30 40 50 60 70 80 90 100
7. foster your students' interest about learning the language(s) you teach?	0 10 20 30 40 50 60 70 80 90 100
8. to write a personal letter to a pen pal in the language(s) you teach who is living in a foreign country?	0 10 20 30 40 50 60 70 80 90 100
9. lower your students' anxiety about learning the language(s) you teach?	0 10 20 30 40 50 60 70 80 90 100
10. increase student achievement in your classes?	0 10 20 30 40 50 60 70 80 90 100

V. The aim of this questionnaire is to explore the emotions teachers experience in the classroom. Please use the scale below to indicate your agreement with the items.

1	2	3	4	5
Strongly disagree	Disagree	Neither agree nor disagree	Agree	Strongly agree

1. I am glad when I achieve teaching goals that are set.	1 2 3 4 5
2. I feel warmth when I just think about my students.	1 2 3 4 5
3. I sweat from frustration when the class is not carried in the way it is supposed to.	1 2 3 4 5
4. I feel like a winner when my students succeed.	1 2 3 4 5
5. At the end of my working day, I just want to rest.	1 2 3 4 5
6. When I am proud of my students, I feel that my confidence is growing.	1 2 3 4 5
7. I feel like I cannot do anything more to correct the behavior of some students.	1 2 3 4 5
8. Exerting a positive influence on my students makes me happy.	1 2 3 4 5
9. The reactions of some students frustrate me so much that I would rather just quit the job.	1 2 3 4 5
10. Because of the behavior of some students, I feel completely helpless.	1 2 3 4 5
11. I honestly care about each of my students.	1 2 3 4 5
12. Due to my students' achievements, I feel as if I am 'growing'.	1 2 3 4 5
13. When I finish classes, I feel numb.	1 2 3 4 5
14. I am joyful when the class atmosphere is positive.	1 2 3 4 5
15. The frustration I feel like working with students undermines my job motivation.	1 2 3 4 5
16. I feel affection towards my students.	1 2 3 4 5
17. I feel defenseless because I cannot help some of my students.	1 2 3 4 5
18. Meetings with successful former students of mine make me proud.	1 2 3 4 5
19. Sometimes I am so exhausted at work that I only think about how to endure.	1 2 3 4 5
20. I am happy when students understand the material.	1 2 3 4 5
21. I feel hopeless when I think about the achievement of some students.	1 2 3 4 5
22. I am filled with pride when I make a student interested in my subject.	1 2 3 4 5
23. Sometimes working with children makes me so tired that I can barely move.	1 2 3 4 5
24. My students evoke feelings of love inside me.	1 2 3 4 5
25. Some students make me so angry that my face goes red.	1 2 3 4 5
26. Pride due to my students' achievements confirms to me that I am	1 2 3 4 5

doing a good job.	
27. When I finish my work, I feel drained.	1 2 3 4 5
28. I love my students.	1 2 3 4 5
29. I get an anger-caused headache from the behavior of some students.	1 2 3 4 5
30. I wish to hug my students since I like them so much.	1 2 3 4 5
31. Due to my speedy pace of work, at the end of the day I feel as if I am going to fall down.	1 2 3 4 5
32. It seems to me that I cannot do anything to get through to some students.	1 2 3 4 5
33. My job sometimes makes me so tired that all I want to do is 'switch off'.	1 2 3 4 5

VI. Please use the following scale to indicate how frequently you engage in the following behaviors when interacting with students.

1	2	3	4	5
Never	Rarely	Sometimes	Often	Always

1. I put on an act in order to deal with students in an appropriate way.	1 2 3 4 5
2. I try to actually experience the emotions that I must show to students.	1 2 3 4 5
3. The emotions I show to students match what I spontaneously feel.	1 2 3 4 5
4. I fake the emotions I show when dealing with students.	1 2 3 4 5
5. I work at developing the feelings inside of me that I need to show to students.	1 2 3 4 5
6. The emotions I express to students are genuine.	1 2 3 4 5
7. I work hard to feel the emotions that I need to show to students.	1 2 3 4 5
8. I put on a 'show' or 'performance' when interacting with students.	1 2 3 4 5
9. The emotions I show to students come naturally.	1 2 3 4 5
10. I show feelings to students that are different from what I feel inside.	1 2 3 4 5
11. I make an effort to actually feel the emotions that I need to show to students.	1 2 3 4 5
12. I just pretend to have the emotions I need to display for my job.	1 2 3 4 5
13. I put on a mask in order to display the emotions I need for the job.	1 2 3 4 5

APPENDIX B. – Teacher Diary

Dear teacher,

The present questionnaire is designed to investigate your emotions and emotion regulation in relation to your self-concept and teaching English as a foreign language. Teaching vocation is replete with various emotions and they have an impact on teacher achievement, interest, engagement and personality development. They are also based on an individual's cognitive interpretations and appraisals of specific situations. The impact of emotions can be positive or negative in nature and emotions can be characterized as activating or deactivating. For instance, enjoyment, pride and hope are positive-activating emotions, while boredom, hopelessness and disappointment are negative-deactivating.

Emotion regulation can be explained as teachers' attempt to affect which emotions they experience and how they express them. Regulation also enables teachers to avert/avoid negative emotions and enhance positive emotions. Emotions can also reflect on teacher's self-concept, i.e. the way they see themselves and the beliefs they have in their own capabilities to execute courses of action required by their profession.

Please fill this questionnaire out after each day at work. Your contribution will provide invaluable insight into emotional experiences of Croatian teachers of English. Please note that the answers you provide will be used for research purposes only and by agreeing to partake in this survey you are giving your informed consent. Your responses are completely anonymous, so try to answer the questions as honestly as possible. There are no right or wrong answers. Thank you!

1. Which of the following emotions did you experience during your day? Multiple answers are possible.
    - joy
    - anger
    - enthusiasm
    - disgust
    - boredom
    - pride
    - love and affection
    - anxiety
    - satisfaction
    - powerlessness
    - enjoyment
    - relief
    - sadness
    - guilt
    - surprise
    - shame
    - empathy
    - excitement

- frustration
- liking
- disliking
- irritability
- fear
- hostility
- disappointment
- Other: _____

Instructions

In the following section each item needs to be answered with regards to the emotion(s) experienced. In other words, if you experienced more than one emotion, the answer will need to cover all of them individually. For instance, in the case of emotion regulation, if you experienced sadness and anger, emotion regulation strategies for both will need to be provided.

2. What caused the emotion(s)? If more than one emotion was experienced, please specify the cause for each of them (e.g. Joy was caused by..., anger was caused by..., etc.).

_____

3. What were you doing when you experienced the emotion(s)? What aspect of foreign language teaching were you involved in (e.g. grammar exercise, working on a text, etc.)? Specify classroom activity for each of the emotions provided.

_____

4. Emotion regulation is a process by which individuals influence which emotions they have, when they have them, and how they experience and express them. Did you do something to regulate it/them?

   - Yes
   - No

5. If you answered 'YES', please describe how you regulated the emotion(s)? Did you resort to a certain strategy or technique (e.g. deep breathing, counting to ten, changing the way you think about a situation, talking to someone, thinking about something joyful, etc.)? Note that a person can up-regulate (increase the intensity or duration), down-regulate (reduce the emotion experience), or not regulate an emotion at all. Please state how you regulated each emotion.

_____

6. After today's lesson, how do you see yourself as a teacher in the future?

_____

7. After today's lesson, how confident are you in your teaching abilities?

_____

Thank you for your participation!

CURRICULUM VITAE

Dino Dumančić

Teaching Assistant

Department of English

University of Zadar

e-mail: ddumancic@unizd.hr

EDUCATION AND TRAINING

2011 State license for English language teachers

Education and Teacher Training Agency, Zagreb (Croatia)

2009 Bachelor's degree in English language and literature and World history

Faculty of Humanities and Social Sciences, Osijek (Croatia)

RESEARCH INTERESTS

Second Language Acquisition, Methodology of Foreign Language Teaching, Second Language Motivation, Emotions and Emotion Regulation in Second Language Learning and Teaching

SELECTED PUBLICATIONS

Vida Blagojević, M., & Dumančić, D. (2021). Intercultural competence from the perspective of university students and teachers. In V. Mlinarević, M. Brust Nemet, and J. Husanović Pehar (Eds.), *Intercultural Education, Conference Proceedings* (pp. 90-102.). Osijek: Faculty of Education, Josip Juraj Strossmayer University of Osijek ; Croatian Academy of Sciences and Arts, the Center for Scientific Work in Vinkovci, Republic of Croatia.

Dumančić, D. (2020). Pre-service teacher self-efficacy beliefs. In M. Matešić and A. Memišević (Eds.), *Language and Mind: Proceedings from the 32nd International Conference of the Croatian Applied Linguistics Society* (pp. 171-183.). Berlin – Peter Lang.

Dumančić, D., & Martinović, A. (2019). Crossing Borders with ELF - A Study on Learning and Using English among Erasmus Students. In I. Fabijanić, L. Štrmelj, V. Ukić Košta and M. Bregović (Eds.), *Migrations – Literary and linguistic aspects* (pp. 269-296). Berlin – Peter Lang.

Dumančić, D. (2018). Investigating Boredom Among EFL Teachers. *ExELL 6 (1)*, 57-80.

Martinović, A., & Dumančić, D. (2018).Using ELF: A Study of Identities among Erasmus Exchange Students. *Journal of Foreign Language Teaching and Applied Linguistics 5*(2), 19- 36.

Rujevčan, D., & Dumančić, D. (2016). Do you have a soft spot for English or is it just not your thing? – a study of Croatian university students' attitudes towards English as a foreign language. In: Zovko Dinković, I. i Mihaljević Djigunović, J. (eds.). *English studies from archives to prospects: Volume 2 – Linguistics and applied linguistics.* Cambridge Scholars Publishing, UK, pp. 270.-290.

Fišer, Z., & Dumančić, D. (2015). How do I 'unjumbel' this? Study of EFL teachers' competences and preferences in teaching students with dyslexia. In: Letica Krevelj, S. i Mihaljević Djigunović, J. (eds.). *UZRT 2014: Empirical studies in applied linguistics*. FF Press, Zagreb, pp. 20.-30.

Dumančić, D. (2014). Multidisciplinary Approaches to Multilingualism: Review of the CALS conference 2014 . In: Čilaš Mikulić, M. i Jurčić, A.T.(eds.). *Croaticum savjetovanje za lektore hrvatskoga kao inoga jezika, 2. zbornik radova*. Filozofski fakultet u Zagrebu, Zagreb, pp.173.-177.

Dumančić, D. (2013). Društvena i komunikacijska uloga zamjenicaoslovljavanja ti i Vi. *Strani jezici 42* (4), pp. 371.-385.

CONFERENCES

2019. Children and languages today – Children and linguistic identity, September 12-14, Osijek

2019. Didactic challenges III: didactic retrospective and perspective, May 16-17., Osijek 2019. 6. Zadarski lingvisti čki forum: Jezik i komunikacija u višejezičnom društvu, 16. ožujka, Zadar

2018. CALS - 32nd International Conference Language and mind- May 3 -5 , Rijeka 2018. 26th Annual International HUPE Conference – April 20-22., Poreč

2017. ELF and Changing English - 10th Anniversary Conference of English as a Lingua Franca – June 12-15., Helsinki

2017. Zadar linguistic forum – research methodology in applied linguistics – June 9-10.

2016. Croatian Society for the Study of English – 3rd national conference of English studies Migrations – November 18-19. Zadar

2016. 24 Annual HUPE Conference – April 8-10. Šibenik

2014. English Studies as Archive and as Prospecting – 80 years of English Studies in Zagreb - September 18-21. Zagreb

2014. UZRT 2014 – Empirical research in applied linguistics – May 16, Zagreb

2014. Croatian Applied Linguistics Society - Multidisciplinary approaches to multilingualism – April 25-27., Zagreb

2013. Intensive seminar - Multilingual subject – University of Pécs– led by Claire Kramsch, Berkeley University, CA

MEMBERSHIPS

Croatian Applied Linguistics Society (CALS)
Croatian Association of Teachers of English (CATE)
Croatian Association for the Study of English (CASE)

Table 2. Bivariate correlations between variables

Scale	1.	2.	3.	4.	5.	6.	7.	8.	9.	10.	11.	12.	13.	14.	15.	16.	17.
1. Gender	1																
2. Years of working experience	.116*	1															
3. Instructional Strategies	.086	.324**	1														
4. Classroom Management	.194**	.283**	.585**	1													
5. Student Engagement	.161**	.328**	.643**	.643**	1												
6. Content Knowledge	.002	.050	.186**	.163**	.093	1											
7. Teacher as Facilitator	.119*	.221**	.531**	.502**	.628**	.389**	1										
8. Joy	.113*	.027	.230**	.201**	.319**	.129*	.317**	1									
9. Pride	.163**	.030	.193**	.179**	.355**	-.008	.249**	.654**	1								
10. Love	.151**	.125*	.168**	.231**	.357**	-.038	,283**	.463**	.517**	1							
11. Anger	.024	-.179**	-.317**	-.420**	-.357**	-.206**	-.380**	-.241**	-.173**	-.336**	1						
12. Fatigue/Exhaustion	-.034	-.175**	-.324**	-.392**	-.367	-.111	-.285**	-.199**	-.188**	-.315**	.708**	1					
13. Hopelessness	.001	-.261**	-.371**	-.556**	-.503**	-.165**	-.420**	-.165**	-.136*	-.304**	.758**	.686**	1				
14. Surface Acting	-.083	-.113*	-.133*	-.165**	-.150**	-.062	-.140*	-.142*	-.134*	-.194**	.269**	.329**	.224**	1			
15. Deep acting	-.007	-.121*	.002	.068	.168**	-.082	.113*	.164**	.257**	.290**	.008	.055	-.075	.348**	1		
16. Naturally Felt Emotions	.002	.137*	.272**	.200**	.257**	.081	.209**	.295**	.212**	.326**	-.283**	-.314**	-.264**	-.616**	-.194**	1	
17. Foreign Language Teacher Self Concept	.130*	.168**	.512**	.364**	.450**	.213**	.449**	.338**	.394**	.378**	-.372**	-.301**	-.341**	-.099	.182**	.222**	1

* $p < .05$, ** $p < .01$

Gender (1 = male, 2 = female)

CURRICULUM VITAE

Anna Martinović (née Kardum)

Associate Professor

Contact details:

Institution: University of Zadar, Department of English Address: Obala Kralja Petra Krešimira IV., 23000 Zadar, Croatia Phone: 023 200-711

Email: amartino@unizd.hr

Citizenship: Croatian, Canadian

Current position: Assistant Professor at the Department of English in the Teacher Education Graduate Programme, University of Zadar.

Education:

PhD (Glottodidactics), University of Zagreb, 2014; MA (English Language and Literature and Philosophy), 1998; Honours BA (History and Philosophy), York University (Canada), 1986.

Teaching experience:

2020 to present: Associate Professor

University of Zadar, Department of English English Language and Literature - Graduate Study Teacher Education Programme

Courses:

Second Language Acquisition, Principles of Teaching English as a Second Language, English Language Teaching Methodology, Practicum I and II

June, 2015 to present: Assistant Professor

University of Zadar, Department of English English Language and Literature - Graduate Study Teacher Education Programme

Courses:

Second Language Acquisition, Principles of Teaching English as a Second Language, English Language Teaching Methodology, Practicum I and II

2006-2015 Senior Lecturer (from 2009), Lecturer

University of Zadar, Centre for Foreign Languages

Courses:

English for Academic Purposes (EAP), English for Specific Purposes (ESP)

2000-2006 Language Instructor, Lecturer

University of Zadar, Department of English

Courses:

EAP, ESP, Language exercises

1999-2004 Language Teacher

Various elementary schools, high schools and a private language school

Courses:

English as a second/foreign language

Research interests:

Second Language Motivation, Second Language Acquisition, Teaching English as a Second/Foreign Language.

Academic and professional positions:

Head of the Sub-Department of English Language and Applied Linguistics, Department of English, University of Zadar (2016 to 2017).

Assistant Head of the Centre for Foreign Languages, University of Zadar (from 2008-2015).

President of the executive board of the Croatian Association of Teachers of English (HUPE) (2007-2009).

President of the Croatian Association of Teachers of English (HUPE) (2005-2007).

President of the Zadar branch of the Croatian Association of Teachers of English (HUPE) (2003-2005).

The IATEFL representative for the Croatian Association of Teachers of English (HUPE) (2003- 2005).

Other:

Has been on the organizing committees for 9 professional and 4 scientific conferences.

Was a member of the committee for Quality Assurance and Enhancement at the Centre for Foreign Languages (2010-2014).

Memberships

The Croatian Association for the Study of English (HDAS) Croatian Association of Applied Linguistics (HDPL) Croatian Association of Teachers of English (HUPE)

International Association of Teachers of a Foreign Language (IATEFL) (2003-2005)

Selected Bibliography

Martinović, Anna & Leonarda Lovrović. (2020). An Introduction to Academic Writing, Zadar: University of Zadar. (University textbook – in the publication process)

Martinović, Anna & Izabela Sorić. (2020). The L2 motivational self system, L2 interest, and L2 anxiety: A study of motivation and gender differences in the Croatian context. ExELL (Explorations in English Language and Linguistics), 6 (1), 37-56.

Martinović Anna & Nadia Mifka-Profozic. (2019). A TESOL Practicum in Croatia. In: Cirocki Andy, Madyarov Irshat., Baecher Laura (eds), Current Perspectives on the TESOL Practicum. Educational Linguistics, vol. 40 (pp. 109-127). Springer, Cham.

Martinović, Anna & Katica Balenović. (2019). A study of English article usage among Croatian university students. Metodički Vidici, 10 (10), 95-112.

Vuleta, Kristina & Anna Martinović. (2019). Pitanja koja nastavnici engleskog kao stranog jezika postavljaju u nastavi [Teacher questions in EFL classrooms], Metodički ogledi, 26 (1), 149-175.

Martinović, Anna & Dino Dumačić. (2019). Crossing borders with ELF: A study on learning and using English among erasmus students, In Ivo Fabijanić, Lidija Štrmelj, Vesna Ukić Košta, Monika Bregović (Eds.), Migrations, Literary and Linguistic Aspects (pp. 269- 296). Berlin: Peter Lang GmbH.

Martinović, Anna & Dino Dumačić. (2018). Using ELF: A Study of Identities among Erasmus Exchange Students. Journal of Foreign Language Teaching and Applied Linguistics (J- FLTAL), 5(2), 19-36.

Martinović, Anna. (2018). The L2 motivational self system: Differences among learners.

Jezikoslovlje, 19(1), 133-157.

Marjančić, Stana & Martinović Anna. (2017). Analiza i evaluacija srednjoškolskih udžbenika engleskoga kao stranog jezika [An Analysis and evaluation of EFL high school textbooks], Strani jezici, 46(1-2), 64-84.

Martinović, Anna. (2017). L2 motivation and L2 anxiety among non-language university majors. In Kristina Cergol Kovačević, Sanda Lucija Udier (Eds.), Applied linguistics research and methodology - Proceedings from the 2015 CALS conference (pp. 121- 134). Frankfurt am Main: Peter Lang GmbH.

Martinović, Anna. (2013). Testing the L2MSS among Croatian university students: A pilot study. In Jelena Mihaljević Djigunović, Marta Medved Krajnović (Eds.), UZRT 2012: Empirical studies in English applied linguistics (pp. 183-192). Zagreb: FF Press.

Martinović, Anna & Poljaković, Ivan. (2012). Discourse analysis in an ESP classroom. In Vladimir Karabalić, Melita Aleksa Varga, Leonard Pon (Eds.), Discourse and dialogue (pp. 251-262). Bern: Peter Lang Verlag.

Martinović, Anna & Poljaković, Ivan. (2010). Attitudes toward ESP among university students. Fluminensia, 22(2), 145- 161.

Poljaković, Ivan & Martinović, Anna. (2009). Multilingualism and its implications. In Marija Omazić, Vladimir Karabalić, Mario Brdar (Eds.), Lingvistika javne komunikacije:

Translatoški, terminološki, međukulturni i problemi jezika struke [Linguistics of public communication: translatological, terminological, intercultural and the problems of language for specific purposes] (pp. 97-106). Zagreb-Osijek: Hrvatsko društvo za primijenjenu lingvistiku – Faculty of Humanities and Social Sciences.

Poljaković, Ivan & Martinović, Anna. (2008). A new approach to teaching foreign languages in universities. In Jagoda Granić (Ed.), Jezična politika i jezična stvarnost [Language policy and language reality] (pp. 225-236). Zagreb: Hrvatsko društvo za primijenjenu lingvistiku.

Martinović, Anna. (2008). Globalisation and the effect of the English language on identity.

Strani Jezici, 37(1), 37-46.

Martinović, Anna. (2005). A contrastive analysis of English and Croatian phrases. In Jagoda Granić (Ed.), Semantika prirodnog jezika i metajezik semantike [Natural Language Semantics and the Metalanguage of Semantics] (pp. 457-470). Zagreb-Split: Hrvatsko društvo za primijenjenu lingvistiku.

Martinović, Anna. (2005). Learning to communicate in the EFL classroom. In Diana Stolac, Nada Ivanetić, Boris Pritchard (Eds.), Jezik u društvenoj interakciji [Language in interaction with society] (pp. 293-301). Zagreb-Rijeka: Hrvatsko društvo za primijenjenu lingvistiku.

Martinović, Anna. (2004). Using literature in the EFL classroom. In Diana Stolac, Nada Ivanetić, Boris Pritchard (Eds.), Suvremena kretanja u nastavi stranih jezika [Modern directions in teaching foreign languages] (pp. 319-325). Zagreb-Rijeka: Hrvatsko društvo za primijenjenu lingvistiku.

Martinović, Anna. (2003). Motivation and Successful Learning. In Diana Stolac, Nada Ivanetić, Boris Pritchard (Eds.), Pshilolingvistika i kognitinva znanost u Hrvatskoj primjenjenoj lingvistici [Psycholinguistics and cognitive science in Croatian applied linguistics] (pp. 465- 472). Zagreb-Rijeka: Hrvatsko društvo za primijenjenu lingvistiku.

Other:

Has translated and proof-read several books, textbooks, and conference proceedings books. In addition, has put together several (unpublished) course books.

Conferences:

Has attended and participated in over 39 professional and scientific conferences. Most recently:

XXII. Days of Psychology in Zadar, International scientific psychology conference, Zadar, Croatia, October 1-3, 2020.

The Teacher: Between Tradition and Modernity (Scientific-professional conference with international participation) within the ‘6th Šime and Ante Starčević Days,’ Gospić, Croatia, May 24-25, 2019. Presentation: The Use of the Mother Tongue in Teaching English.

4th International conference 'Foreign Languages and Tourism (FLT2018)', Zadar, Croatia, November 8-9, 2018. Paper presentation: LSP and Language Teaching: A Focus on Vocabulary Learning.

30th International Conference on Foreign/Second Language Acquistition, Szczyrk, Poland, May 17-19, 2018. Paper presentation: A picture of leaner identitiy through the lens of emotions, motivation, and self-regulation.

26th Annual International HUPE Conference, Poreč, Hrvatska, April 20-22, 2018. Plenary talk:

Once upon a time there lived a language teacher...

ELF & Changing English: 10th Anniversary Conference of English as a Lingua Franca, June 12-15, 2017, University of Helsinki, Helsinki, Finland.

3rd National Conference of English studies (Croatian Society for the Study of English - HDAS):

Migrations, November 18-19, 2016, Zadar, Croatia.

30th International conference (Croatian Applied Linguistics Society): Language in Research and Teaching, May 12-14, 2016, Rijeka, Croatia.

24th Annual HUPE Conference, April 8-10, 2016. Šibenik, Croatia.

1st International conference (Association of LSP Teachers at Higher Education Institutions):

From Theory to Practice in ESP, February 19-20, 2016, Zagreb, Croatia.

29th International conference (Croatian Applied Linguistics Society): Applied Linguistic Research and Methodology, April 24-26, 2015, Zadar, Croatia.

3rd professional-scientific conference (Association of LSP Teachers at Higher Education Institutions): From Theory to Practice in ESP, February 20-21, 2015, Zagreb, Croatia.

International Conference English Studies as Archive and as Prospecting: 80 Years of English Studies in Zagreb, September 18-21, 2014, Faculty of Humanities and Social Sciences, Zagreb, Croatia.

International Conference on Motivational Dynamics and Second Language Acquisition, August 28-30, 2014, The University of Nottingham, Nottingham, England.

Irena Burić, PhD
Department of Psychology
University of Zadar
Email: iburic@unizd.hr

EMPLOYMENT

- 2018–present Associate Professor (University of Zadar, Department of Psychology)
- 2013–2018 Assistant Professor (University of Zadar, Department of Psychology)
- 2011-2013 Postdoctoral Researcher (University of Zadar, Department of Psychology)
- 2006-2010 Research Fellow (University of Zadar, Department of Psychology)

EDUCATION

- **2010 PhD** degree in Educational Psychology (University of Zagreb, Faculty of Humanities and Social Sciences)
- **2005 MA** degree in Psychology (University of Zagreb, Faculty of Humanities and Social Sciences)

TEACHING:

- Introduction in Descriptive and Inferential Statistics, Basics of Inferential Statistics and Introduction in Educational Psychology (Undergraduate psychology program in psychology at University of Zadar)
- Introduction in Structural Equation Modeling and Emotion and Motivation in Education (Graduate psychology program in psychology at University of Zadar)
- Quality in Education and Self-regulation of Learning and Teaching (Postgraduate professional study program „Leadership and management of an educational institution" at University of Zadar)
- Application of Multilevel Modeling (Postgraduate doctoral study program in psychology at University of Zagreb, Faculty of Humanities and Social Sciences)

SELCETED PUBLICATIONS:

Burić, I., Kim, L., Hodis, F. (2021). Emotional labor profiles among teachers: associations with positive affective, motivational and well-being factors, *Journal of Educational Psychology*, u postupku objavljivanja. (Web of Science: Q1, IF=5.028; Scopus: Q1, SJR=3.272)

Kim, L. E., & **Burić, I.** (2020). Teacher self-efficacy and burnout: Determining the directions of prediction through an autoregressive cross-lagged panel model. *Journal of Educational Psychology, 112*(8), 1661–1676. (Web of Science: Q1, IF=5.028; Scopus: Q1, SJR=3.272)

Burić, I., & Kim, L. E. (2020). Teacher self-efficacy, instructional quality, and student motivational beliefs: An analysis using multilevel structural equation modeling. *Learning and Instruction, 66*, 101302. (Web of Science: Q1, IF=3.323; Scopus: Q1, SJR=2.647)

Burić, I., & Moe, A. (2020). What makes teachers enthusiastic: The interplay of positive affect, self-efficacy and job satisfaction. *Teaching and Teacher Education, 89*, 103008. (Web of Science: Q1, IF=2.686; Scopus: Q1, SJR=1.803)

Burić, I., & Frenzel, A. C. (2020). Teacher emotional labour, instructional strategies and students' academic engagement: A multilevel analysis. *Teachers and Teaching: Theory and Practice*, 1-18. (Web of Science: Q1, IF=2.345; Scopus: Q1, SJR=1.412)

Burić, I., & Frenzel, A. C. (2019). Teacher anger: New empirical insights using a multi-method approach. *Teaching and Teacher Education, 86*, 102895. (Web of Science: Q1, IF=2.686; Scopus: Q1, SJR=1.803)

SELECTED INVITED LECTURES, PRESENTATIONS AND WORKSHOPS

- Invited lecture: *The role of emotional processes in explaining teacher well-being and job performance*. 4th Days of Vocational teachers, Šibenik, Croatia, 2020.
- Invited workshop for faculty staff: *How to motivate students to learn*. University of Padua, Italy, 2020.
- Invited lecture: *Emotion in Education*. NEPC Summer School Emotions matter: Socio-emotional learning in education, Trakošćan, Croatia, 2019.
- Invited lecture: *Successful learning and teaching: The role of social-emotional processes*- Symposium "Neuroscience of memory and learning", Zagreb, Croatia, 2019.
- Invited lecture: *I'm a teacher and I feel: The role of teacher emotion in contemporary education*. 21st Psychology Days in Zadar, Zadar, Croatia, 2018.
- Invited symposium: *Teachers' emotions and emotion regulation strategies*. 19th European Conference on Personality, Zadar, Croatia, 2018.
- Invited lecture to doctoral students: *Teacher emotion and emotion regulation*. University of Florence, Florence, Italy, 2018.
- Invited presentation: *Teacher emotion and emotion regulation*. Research Colloquia at Ludwig-Maximillian University of Munich, Germany, 2018.

AWARDS AND FUNDING

- 2020-2023 Teacher personality, emotion and job performance: A dynamic perspective (IP-2019-04-5472) funded by Croatian Science Foundation (role: principal investigator; amount: 76.345,00 Euros) – Aim: to investigate the dynamic nature of teachers' emotional processes in explaining their effectiveness by implementing sophisticated longitudinal multilevel designs and intensive longitudinal designs and collecting data from multiple sources (targeted samples: 8000 teachers and 12000 students)
- 2014-2017 Teachers' emotions and emotion regulation strategies: personal and contextual antecedents and effects on motivation, well-being and relationships with students (UIP-2013-11-5065) funded by Croatian Science Foundation (role: principal investigator; amount: 28.783,00 Euros) – Aim: to investigate the occurrence, nature, and causes and effects of teachers' emotional processes by implementing a multi-method approach (i.e., qualitative and quantitative methods; cross-sectional, longitudinal, and multilevel designs) and collecting data from multiple sources on samples of approximately 4000 teachers and 2000 students
- 2018 Erasmus+ Staff Mobility (University of Zadar)
- 2017 Rector's award for extraordinary achievement in scientific work (University of Zadar)
- 2015 and 2018 Award for scientific contribution (Department of Psychology, University of Zadar)
- 2000 State scholarship for gifted students (Croatian Ministry of Science, Education and Sport)